Arduino Based Wireless Power Meter

Sachin Kumar[1], Mayank Singh[2], Pankaj Singh[3], Prof. Dr.A.A.Shinde[4]
[1,2,3]*UG student, Dept. of Electronics, Bharati Vidyapeeth Deemed to be University College of Engineering, Pune-411043, Maharashtra, INDIA*
[4]*Professor, Dept. of Electronics, Bharati Vidyapeeth Deemed to be University College of Engineering, Pune-411043, Maharashtra, INDIA*

Abstract- **One avenue through which today's energy problems can be addressed is through the reduction of energy usage in households. The existing utility system only provides feedback at the end of the month in the form of a bill and consumed kilowatt hours (kWh). A homeowner has no way to track their power usage on a more immediate basis. The Arduino based wireless power meter is a non-invasive current meter for household power with a Matlab interface. Current is measured using split core current transformers. This data is then transmitted over a 802.11b connection through the home's wireless router to the base station and Matlab interface. The project aims to provide a clear picture of a home's current usage, and through this data provide an estimate to power consumption. The project also aims to identify which devices turn on and off by analysis of this current data. The goal of provided such data to a user is that they will optimize and reduce their power usage.**

1. INTRODUCTION

In the existing power utility set up, consumers are presented with usage information only once a month with their bill. The length of time between updates about power usage is far too long for a consumer to observe a changed behavior's effect on power usage. In addition utility bills can be convoluted in how they present usage information, and a consumer may not be able to decipher changes in their power usage from the last bill. An opportunity to educate customers on power usage is lost because of these realities. If a person can instantaneously see how much power leaving a device on by accident consumes per minute, they may be more careful in the future about letting devices run when not needed. The goal of creating more awareness about energy consumption would be optimization and reduction in energy usage by the user. This would reduce their energy costs, as well as conserve energy.

2. BACKGROUND

A. ENERGY METER

The meter which is used for measuring the energy utilises by the electric load is known as the energy meter. The energy is the total power consumed and utilised by the load at a particular interval of time. It is used in domestic and industrial AC circuit for measuring the power consumption. The meter is less expensive and accurate.

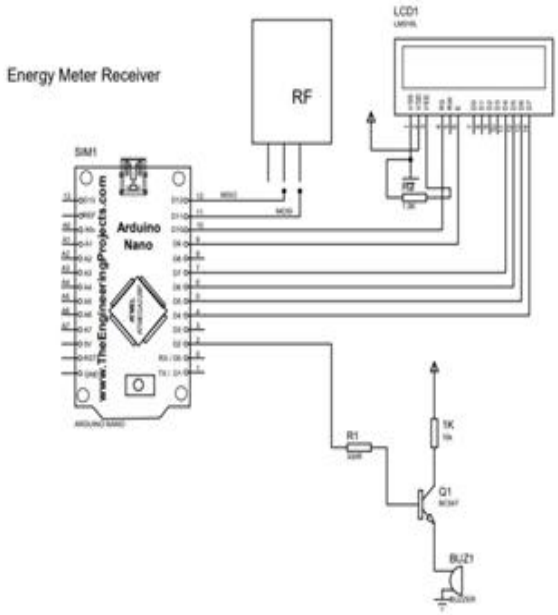

Fig.1 Construction of Energy Meter

Fig. 1 depicts the construction of energy meter. The components of this system are two silicon steel laminated electromagnets. The upper electromagnet is called shunt magnet and it carries a voltage coil consisting of many turns of thin wire. The lower electromagnet is called series magnet and it carries the two current coils consisting of a few turns of thick wire. Current coils are connected in series with the circuit and load current passes through it.

Whereas voltage coil is connected to the supply mains and produce a high ratio of inductance to resistance. There is copper bands in the lower part of shunt magnet which provides frictional compensation so that the phase angle between shunt magnet flux and the supply voltage is exactly 90o.

B. NRF24L01

The NRF24L01 is a wireless transceiver module, meaning each module can both send as well as receive data. They operate in the frequency of 2.4GHz, which falls under the ISM band and hence it is legal to use in almost all countries for engineering applications. The modules when operated efficiently can cover a distance of 100 meters (200 feet) which makes it a great choice for all wireless remote controlled projects.

The module operates at 3.3V hence can be easily used with 3.2V systems or 5V systems. Each module has an address range of 125 and each module can communicate with 6 other modules hence it is possible to have multiple wireless units communicating with each other in a particular area. Hence mesh networks or other types of networks are possible using this module. So if you are looking for a wireless module with the above properties then this module would be an ideal choice for you.

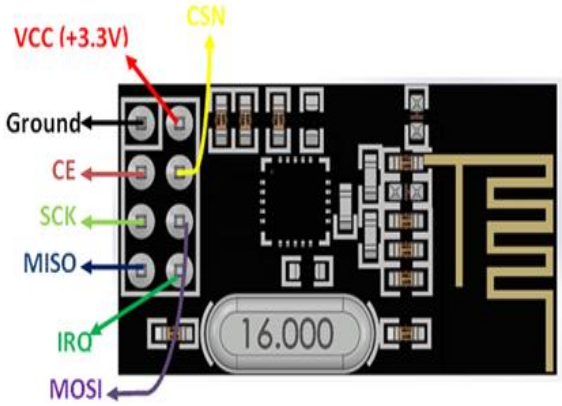

Fig. 2 Pin Layout of NRF24L01

C. ARDUINO NANO

The Arduino Nano is a small, complete, and breadboard-friendly board based on the ATmega328P (Arduino Nano 3.x). It has more or less the same functionality of the Arduino Duemilanove, but in a different package. It lacks only a DC power jack, and works with a Mini-B USB cable instead of a standard one.

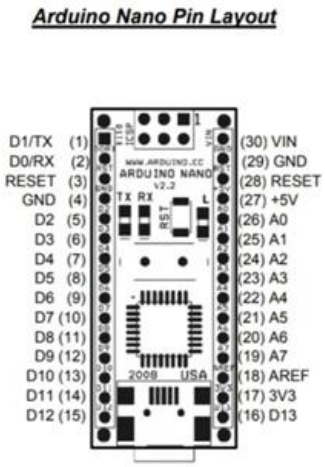

Pin No.	Name	Type	Description
1-2, 5-16	D0-D13	I/O	Digital input/output port 0 to 13
3, 28	RESET	Input	Reset (active low)
4, 29	GND	PWR	Supply ground
17	3V3	Output	+3.3V output (from FTDI)
18	AREF	Input	ADC reference
19-26	A7-A0	Input	Analog input channel 0 to 7
27	+5V	Output or Input	+5V output (from on-board regulator) or +5V (input from external power supply)
30	VIN	PWR	Supply voltage

Fig.3 Pin Layout of Arduino Nano

3. IMPLEMENTATION

Our load circuit comprises of Resistive, Inductive, Capacitive loads. In this project we have used only Resistive loads of bulbs of each 200watts. We used potential transformer and current transformers , are stepdown to 3V.

Arduino can accept up to 5 volts only. We calibrated each and measurement of power by the rating of bulb. Thus, an interface with hardware and software is made easier with arduino sketch for power and energy measurement. For the sake of tutorial I have used a perf board to solder all the components as shown in the circuit. I have used a Phoenix screw terminal to connect the load and normal DC barrel Jack to connect my power source. The Arduino Nano board and the LCD are mounted on a Female Bergstik so that they can be re-used if required later.

After getting the hardware ready, upload the Arduino code to your Nano board. Adjust the trimmer pot to control the contrast level of the LCD until you see a clear intro text. To test the board connects the load to the screw terminal connector and the source to the Barrel jack. The source voltage should be more than 6V for this project to work, since the Arduino required +5V to operate. IF everything is working

fine you should see the value of Voltage across the load and the current through it displayed in the first line of the LCD. The above way of calculating the value of Actual Voltage and current will work just fine. But suffers from one drawback, that is the relationship between the measured ADC voltage and actual voltage will not be linear hence a single multiplier will not give very accurate results, the same applied for current as well.

So to improve the accuracy we can plot of set of measured ADC values with actual vales using a known set of values and then use that data to plot a graph and derive the multiplier equation using the linear regression method.

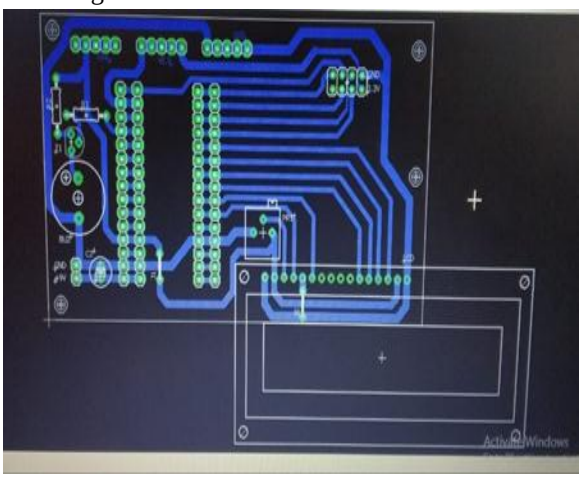

Fig. 4 Receiver Board Layout

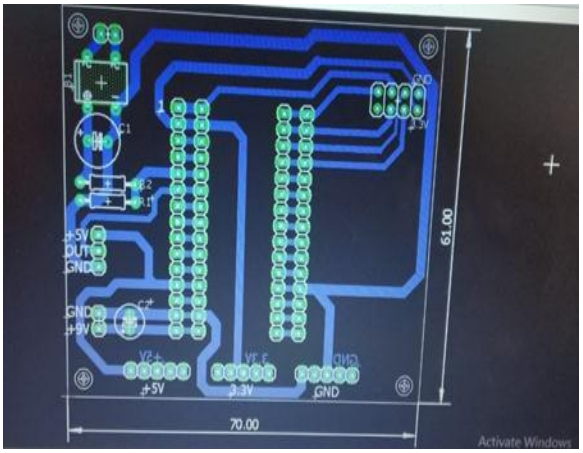

Fig. 5 Transmitter Board Layout

4. RESULTS AND DISCUSSION

The system was successful in measuring current within an acceptable range of error, and sending that information at a higher update rate than previous similar projects have done. Moving time expensive floating point calculations off the Arduino and performing them on the base station helped to speed up execution time, but difficulties with plotting data and receiving the packets on the base station side lowered performance. The device detection feature may still be realized if the update rate could be recovered from the lost packet issue, but more likely a more detailed analysis of the shape of the waveform would be needed to do such turn on and turn off detection.

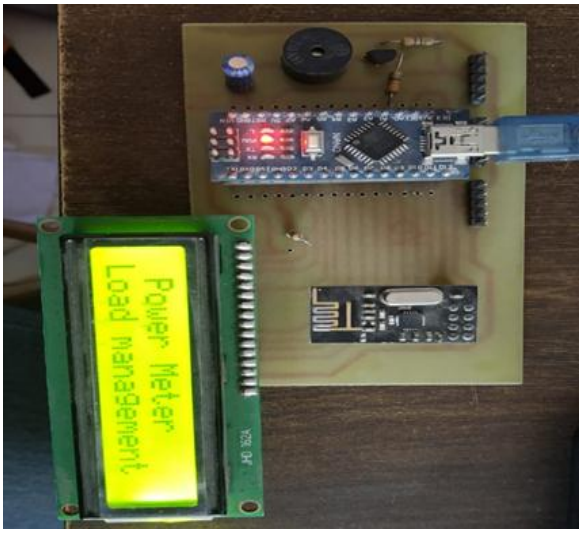

Fig. 6 Output Pic of the Project

5. CONCLUSION

The project was a valuable experience in the design, implementation, and testing of a system that involved several discrete hardware and software components. The use of an open source project for such a central function as the IP stack in the project was initially planned to be a large drain in design time, but ended up greatly accelerating the design of the wireless part of the embedded system. More time was available for the current measurement circuit, which was able to go through several designs before an acceptable one was reached. Ultimately the system accomplished its primary goal of presenting energy information to a user in a clear way.

REFERENCES

[1] Arduino.http://arduino.cc/en/Main/ArduinoBoardDuemilanove. 2009

[2] WayneStorr.www.electronics-tutorials.ws/diode/diode_6.html. 2010

[3] AsyncLabs.http://asynclabs.com/wiki/index.php?title=WiShield_1.0 2009
[4] https://circuitglobe.com/energy-meter.html
[5] J. Mitola III, "Software Radios. Survey, Critical Evaluation and Future Directions", IEEE National Telesystems Conference, pp. 13-15, 1992
[6] Rod Elliot. Precision Rectifiers. http://sound.westhost.com/appnotes/an001.htm. 2009