EXCITATION OF D.C. GENERATOR

Tarun Saini , Sangeet Kumar , Shruti Khanna

Abstract- **Through this paper we tend to propose the excitation of d.c. generator In electricity generation, a generator is a device that converts mechanical energy to electrical energy for use in an external circuit. The source of mechanical energy may vary widely from a hand crank to an internal combustion engine. Generators provide nearly all of the power for electric power grids and they are mady by 3 methods as an excitation of dc generator.**

Index Terms- **Rotar, stator, seperately excitation, self excitation, series excitation, shunt excitation, compound excitation.**

I. INTRODUCTION

Before the connection between magnetism and electricity was discovered, electrostatic generators were used. They operated on electrostatic principles. Such generators generated very high voltage and low current. They operated by using moving electrically charged belts, plates, and disks that carried charge to a high potential electrode. The charge was generated using either of two mechanisms: Electrostatic induction and the triboelectric effect. Because of their inefficiency and the difficulty of insulating machines that produced very high voltages, electrostatic generators had low power ratings, and were never used for generation of commercially significant quantities of electric power. The operating principle of electromagnetic generators was discovered in the years of 1831–1832 by Michael Faraday. The principle, later called Faraday's law, is that an electromotive force is generated in an electrical conductor which encircles a varying magnetic flux.

He also built the first electromagnetic generator, called the Faraday disk, a type of homopolar generator, using a copper disc rotating between the poles of a horseshoe magnet. It produced a small DC voltage.

II. DISCUSSION

An electric generator is a device that converts mechanical energy to electrical energy. A generator forces electrons to flow through an external electrical circuit. It is somewhat analogous to a water pump, which creates a flow of water but does not create the water inside. The source of mechanical energy, the prime mover, may be a reciprocating or turbine steam engine, water falling through a turbine or waterwheel, an internal combustion engine, a wind turbine, a hand crank, compressed air or any other source of mechanical energy.

The two main parts of an electrical machine can be described in either mechanical or electrical terms. In mechanical terms, the rotor is the rotating part, and the stator is the stationary part of an electrical machine. In electrical terms, the armature is the power-producing component and the field is the magnetic field component of an electrical machine. The armature can be on either the rotor or the stator. The magnetic field can be provided by either electromagnets or permanent magnets mounted on either the rotor or the stator. Generators are classified into two types, AC generators and DC generators.

"Energy can be converted from one form to other form" – A generator does the same – it converts mechanical energy to electrical energy. Mechanical energy can be created by using water turbines, steam turbines, internal combustion engines etc. And a generator converts this mechanical energy to electrical energy. Generators can be broadly classified as AC generators and DC generators. Here lets take a look the the types of DC generators.

DC generators are classified based on their method of excitation. So on this basis there are two types of DC generators:-

1. Separately excited DC generator
2. Self excited DC generator

Self excited DC generator can again be classified as

a) DC Series generator
b) DC Shunt generator
c) DC Compound generator.

1. Separately excited DC generator

As you can guess from the name itself , this dc generator has a field magnet winding which is excited using a separate voltage source (like battery). You can see the representation in the below image. The output voltage depends on the speed of rotation of armature and field current. The higher the speed of rotation and current – the higher the output e.m.f

Since the operation of a dc machine depends upon a fixed polarity of the poles which doesnot vary with time , the field coils needs energization from a dc source .

A dc generator whose field winding is excited from an independent external source, such as a battery, the generator is called seperatly excited dc generator .

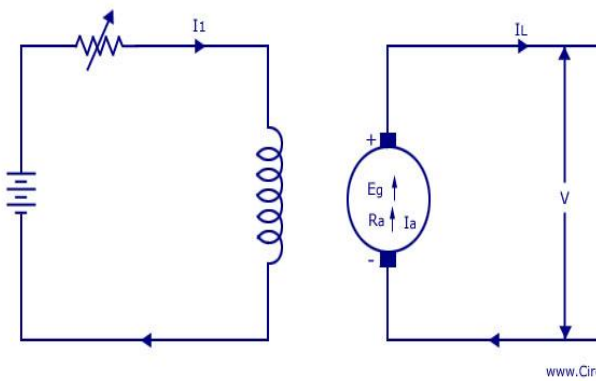

$I_a = I_l = I$ …….. (1)

V=Eg-Ira …….. (2)

Power , $p_g = E_g I$

Power delivered, $P_L = VI$

Charactersticks :-

This curve gives the relation between the terminal voltage (V) and load current. The external characteristic curve lies below the internal characteristic curve. Here, AD line in the diagram below is indicating the change in terminal voltage(V) with increasing load current. It can be seen from figure that when load current increases then the terminal voltage decreases slightly. This decrease in terminal voltage can be maintained easily by increasing the field current and thus increasing the generated voltage. Therefore, we can get constant terminal voltage.

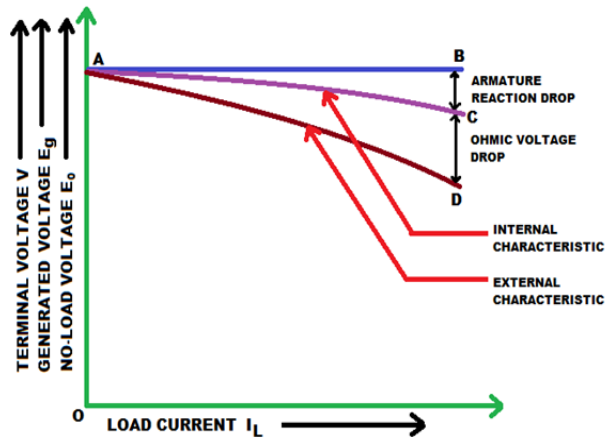

INTERNAL AND EXTERNAL CHARACTERISTIC CURVES

Separately excited DC generators have many advantages over self-excited DC generators. It can operate in stable condition with any field excitation and gives wide range of output voltage. The main disadvantage of these kinds of generators is that it is very expensive of providing a separate excitation source.

2. Self excited DC generator :-

A field generator whose field winding is excited by the current supplied by the generator itself , is called a self excited dc generator

A series DC generator is shown below in fig (a) – in which the armature winding is connected in series with the field winding so that the field current flows through the load as well as the field winding.Field winding is a low resistance,thick wire of few turns. When the field winding of a DC generator is connected in series with the armature, the generator is called a series-wound generator (Figure 10). The excitation current in a series-wound generator is the same as the current the generator delivers to the load. If the load has a high resistance and only draws a small amount of current, the excitation current is also small. Therefore, the magnetic field of the series field winding is weak, making the generated voltage low. Conversely, if the load draws a large current, the excitation current is also high. Therefore, the magnetic field of the series field winding is very strong, and the generated voltage is high.

A shunt DC generator is shown in figure (b), in which the field winding is wired parallel to armature winding so that the voltage across both are same. The

field winding has high resistance and more number of turns so that only a part of armature current passes through field winding and the rest passes through load.

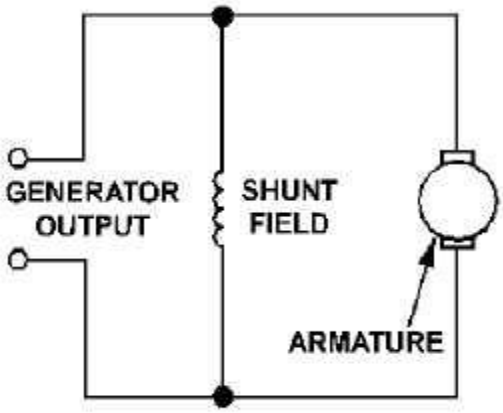

1-17 Shunt-Wound Generators In a shunt-wound generator, like the one shown in figure 1-16, the field coils consist of many turns of small wire. They are connected in parallel with the load. In other words, they are connected across the output voltage of the armature. Figure 1-16.—Shunt-wound generator. Current in the field windings of a shunt-wound generator is independent of the load current (currents in parallel branches are independent of each other). Since field current, and therefore field strength, is not affected by load current, the output voltage remains more nearly constant than does the output voltage of the series-wound generator. In actual use, the output voltage in a dc shunt-wound generator varies inversely as load current varies. The output voltage decreases as load current increases because the voltage drop across the armature resistance increases (E = IR). In a series-wound generator, output voltage varies directly with load current. In the shunt-wound generator, output voltage varies inversely with load current. A combination of the two types can overcome the disadvantages of both. This combination of windings is called the compound-wound dc generator.

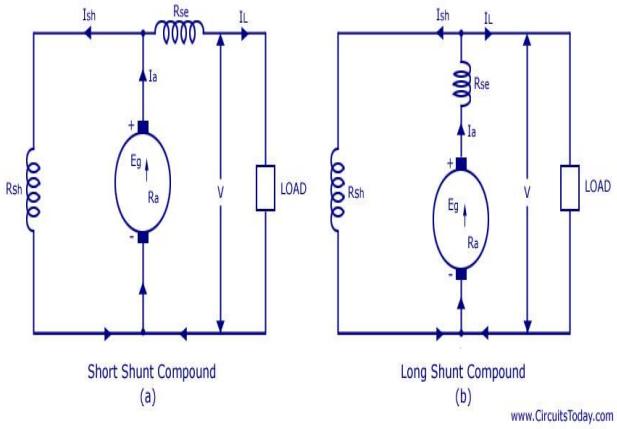

A compound generator is shown in figure below. It has two field findings namely Rsh and Rse. They are basically shunt winding (Rsh) and series winding (Rse). Compound generator is of two types – 1) Short shunt and 2) Long shunt

Short shunt:- Here the shunt field winding is wired parallel to armature and series field winding is connected in series to the load. It is shown in fig (1)

Long shunt:- Here the shunt field winding is parallel to both armature and series field winding (Rse is wired in series to the armature). It is shown in figure

So you have got a basic idea about the types of DC generators! Now you may know that these generators are used only for special industrial purposes where there is huge demand for DC production. Otherwise electrical energy is produced by AC generators and is transmitted from one place to other as AC itself. When a DC power is required, we usually convert AC to DC using rectifiers.

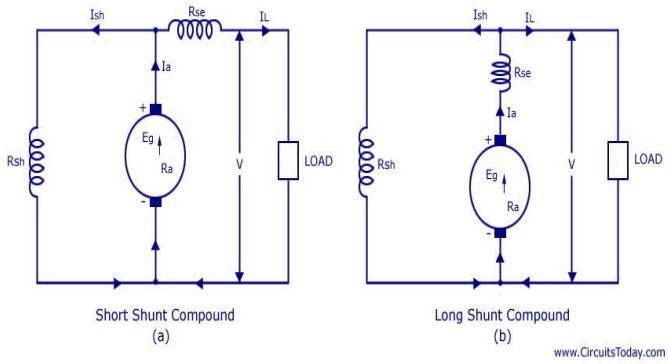

Uses :-

I. They are used for general lighting.

II. They are used to charge battery because they can be made to give constant output voltage.

III. They are used for giving the excitation to the alternators.
IV. They are also used for small power supply.

III. CONCLUSION

Among various types of DC generators, the compound wound DC generators are most widely used because of its compensating property. We can get desired terminal voltage by compensating the drop due to armature reaction and ohmic drop in the in the line.

REFERENCES

1.J.B.Gupta (electromechanical energy conversion)
2.wikipedia .org
3. electrical-engineering-portal.com