AI-Powered Traffic Management System

Srisathiya K[1], Prakasika K[2], Sivapriya P[3], Monisha C[4], Manusri V[5]
[1]*Assistant Professor, Department of Artificial Intelligence and Data Science Dhirajlal Gandhi College of Technology Salem, India*
[2,3,4,5]*Department of Artificial Intelligence and Data Science Dhirajlal Gandhi College of Technology Salem, India*

***Abstract*—This project presents an integrated system combining computer vision and embedded hardware for intelligent traffic enforcement and automated vehicle speed regulation. The system is divided into two main stages: software and hard- ware. On software side, an advanced object detection model (YOLOv8) is used to identify and extract license plate numbers and helmet-wearing status from uploaded images. Simultaneously, a trained deep learning model identifies road speed signs (20km/h, 50km/h, 100km/h) using real-time webcam input. The extracted license plate data and detected speed limits are then transmitted to an Arduino Uno via serial communication. On hardware side, the Arduino processes the received data to display the license plate on a 16x2 LCD. Based on the detected speed limit, the system uses a MOSFET circuit to control the speed of a DC motor accordingly. Additionally, a buzzer and LED indicators provide visual and auditory alerts based on helmet compliance and speed instructions. This intelligent system simulates a real-world scenario of smart surveillance and automated vehicle response, promoting road safety and law enforcement through automation. It can be further expanded for real-time vehicle tracking and traffic rule violation detection in smart city applications.**

***Index Terms*—ALPR, 16x2 LCD, Detected Speed Limit, MOS- FET for controlling the Speed of Dc Motor, Visual and Auditory alerts based on Helmet Compliance**

I. INTRODUCTION

Road safety and traffic regulation are critical components in ensuring secure and organized transportation systems.With increasing number of vehicles on the road, enforcing traffic rules such as wearing helmets and adhering to speed limits has become a major challenge.This project proposes a smart and automated solution that uses computer vision and embedded systems to address these concerns efficiently.The system is designed in two stages such as both hardware and software.In software stage, an image is processing using a YOLOv8- based deep learning model to detect the presence of a helmet and extract the license plate number of the rider.A secondary road sign recognition model is used to detect speed limit signs from a live webcam feed.Then the extracted data is transmitted to Arduino Uno for further processing.In hardware stage, Arduino receives and displays the license plate on LCD screen.Then it adjusts the speed of a DC motor through a MOSFET circuit based on detected speed limit.Visual indicators (green/red LEDs) and buzzer are used to indicate rule violations.This intelligent setup demonstrates how automation can improve road safety by combining software detection with real time hardware implementation or response.

II. LITERATURE SURVEY

A. Title: Fast Helmet and License Plate Detection Based on Lightweight YOLOv5
Authors: Chenyang Wei, Zhi Tan, Qiang Qing, Renchao Zeng, Guanghui Wen
Abstract: This study shows a light Yolov5-based model used to rapidly detecting elements and several plates of electric bikes. By implementing two main strategies to improve the original Yolov5 model, this model provides efficient detection suitable for embedded systems, such as unmanned attack vehicles (UAVs) by ensuring accuracy for helmet and license- related detection tasks.
Published on: Sensors,2023

B. Title: Automatic License Plate Recognition System Based on the YOLO Detector
Authors: Rayson Laroca, Luiz A.Zanlorensi, Gabriel R.Goncalves, Eduardo Todt, William Robson Schwartz, David Menotti
Abstract: This paper presents an advanced automated regis- tration code recognition system that utilizes the yolo algorithm object detector for efficient detection. The device integrates the identity of license plates and the classification of

street configurations to decorate popularity accuracy by using imple- menting publish-processing regulations. Having been trained on numerous datasets the usage of numerous information augmentation techniques, the model demonstrates adaptability in extraordinary conditions. The machine attained a mean give up-to-stop reputation rate of 96.9 percent throughout 8 public datasets, surpassing preceding works and industrial structures in a couple of benchmarks. moreover, the model operates in actual-time, effectively dealing with the processing of a couple of motors simultaneously.
Published in: arXiv preprint,2019

C. Title: Optimizing Helmet Detection with Hybrid YOLO Pipelines
Authors: Vaikunth M, Dejey D, Vishaal C, Balamurali S Abstract: The goal of this look at is to improve helmet detection by way of making use of a hybrid yolo version hyolo that includes elements from yolov8 yolov9 and yolov11 the research investigates those models via assessing their reliability and computational load suggesting an greater architectural pipeline that drastically complements usual performance the opinions performed on don't forget precision and mean average precision map display that h-yolo surpasses individual yolo models making it the favored preference for actual-time helmet detection applications.
Published on: arXiv preprint,2024

D. Title: Vehicle and License plate recognition with a novel data set for Toll Collection
Authors: Muhammad Usama, Hafeez Anwar, Abbas Anwar, and Saeed Anwar
Abstract: This article proposes an automatic scheme for toll collections. This includes three stages: vehicle model recognition, license plate pinpoint and reading. Frame-by-frame depth architectures, including Yolov3, Yolov4, and faster R-CNNs, are used for issues that affect image variation based on factors such as vehicle decoration and lighting conditions. A new data record with 10,000 images for 6 vehicle types, another vehicle and license plate data set (DVLPD) has been introduced. The highest average accuracy of 0.5 is 98.8 percent for vehicle detection, 98.5 percent for some covers, and 98.3 percent for reading the shell of numbers, indicating the effectiveness of the frame.
Published in: arXiv preprint,2022

E. Title: The Real-Time Helmet Violation Detection in AI City Challenge 2023 with genetic-Algorithm-Enhanced YOLOv5
Authors: Elham Soltanikazemi, Ashwin Dhakal, Bijaya Kumar Hatuwal, Imad Eddine Toubal, Armstrong Aboah, Kannappan Palaniappan
Abstract: The model is trained in the NVIDIA AI metropolis executing the 2023 track 5 dataset. The model attains precision keeping in mind and map ratings of 0.848 0.599 and 0.641 respectively on education facts and a map rating of 06667 on take a look at datasets These findings spotlight the functionality of the version in enhancing motorcycle protection by detecting helmet violations in actual time
Published in: arXiv preprint,2023

III. EXISTING SYSTEM

The current system for tracking road safety heavily relies on manual enforcement and conventional surveillance cameras. Traffic police or cctv systems are employed to keep an eye on violations like not wearing helmets, exceeding speed limits, and identifying vehicles through license plates. In certain advanced systems, ANPR (automatic number plate recognition) is employed to capture license plates, while radar sensors are utilized to detect speed. Unfortunately, these systems tend to work independently and are not connected to real-time alert systems. Furthermore, numerous current systems rely on manual intervention for reviewing footage and imposing penalties, which is a slow and inefficient process. The current level of automation in detecting helmet violations and recognizing speed limit signs is limited. Additionally, these systems do not have the capability to connect with microcontrollers like arduino, which means they cannot trigger immediate alerts or safety measures, resulting in insufficient real-time safety enforcement.

A. Disadvantages of the Existing System:
- High dependency on manual monitoring and human re- view.
- Loss of automatic or alerting responses in actual time.
- Constrained accuracy in detecting helmet violations and pace signs and symptoms costly infrastructure.
- Preservation expenses are no longer scalable

or trans- portable for rural or far off regions.

IV. PROPOSED SYSTEM

The proposed system integrates both software and hardware components to create an intelligent and automated road safety monitoring solution. On the software side, deep learning mod- els such as Yolov8 use real-time recognition of helmets and license plates from uploaded images, as well as CNN-based models for identifying speed limit signs via live webcams. The recognized license plate number and helmet status are sent to the Arduino UNO via serial communication. Arduino receives this data on the hardware page and displays the license plate number of the LCD. Depending on the recorded speed limit, the MOSFET-controlled DC motor sets the speed that simulates the movement of the vehicle, but summer and LED indicators are aware of violations. This system is ideal for intelligent cities and automated road safety applications as it ensures real-time feedback and enforces traffic rules more efficiently.

A. Advantages of the Proposed System:

- Automated detection and action with minimal human intervention.
- Ensure proper identification of license plates, wear helmets, and follow speed limits are essential for safe driving.
- The hardware (alerts and motor control) responds in real time to the software input, taking immediate action.
- Cost-effective and scalable using the Arduino and basic components.
- Compact and adaptable for various urban and rural settings.

V. SYSTEM REQUIREMENTS

A. Hardware Requirements

- Arduino Uno:

The Arduino Uno serves as the main hardware con- troller in the AI-powered traffic management system, receiving processed data like license plate numbers and speed limits from the computer vision software through serial communication. It shows the identified license plate on a 16x2 LCD screen in real-time for continuous monitoring. According to the speed limit determined by the software, the arduino regulates a dc motor using a mosfet circuit, showcasing automated enforcement. The board also oversees a buzzer and led indicators to offer instant auditory and visual warnings for helmet usage and speed infractions. By combining these elements, the arduino facilitates immediate responses to traffic rule violations identified by the software, establishing a closed-loop safety system. This setup demonstrates how arduino bridges intelligent software detection with direct, actionable hardware control for smart traffic management.

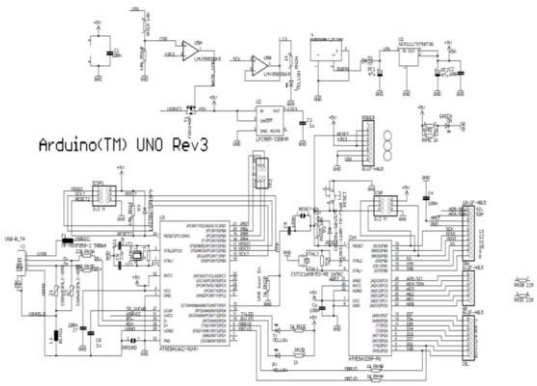

Fig.1 Arduino(TM) UNO Rev3

- LCD display:

The ”LCD display” screen within an AI-affected traffic control machine is determined by computer vision soft- ware and used to display license plate numbers provided to users and operators in real-time visual data. In addition to the current registration code monitored or processed, it acts as an instant connection for transferring important data received by Arduino UNO. By displaying this in- formation on a fluid crystal display, the device improves transparency and allows you to quickly see and check the recognized engine. The LCD display acts as a feedback mechanism, allowing users to evaluate the performance of the system and enable software instructions to effectively send hardware. In the traffic management domain, this dynamic program allows efficient monitoring and immediate response to violations. In summary, the LCD screen acts as a critical connection between automatic recognition and human supervision in smart visitor control systems.

- MOSFET:

The MOSFETs in AI-driven traffic management systems control the speed of the DC engine based on speed limits recognized by the software and are used as electronic switches that share the Arduino UNO. The Arduino outputs a PWM signal (pulse width modulation) to the MOSFET target, adjusts the amount of electricity flowing through the motor,

and adjusts its speed accurately. This setup allows the system to simulate vehicle movement with different speed limits and provide hardware response to recognized traffic conditions. MOSFETs are preferred over regular transistors because they are safer and more efficient to switch and control the higher currents than the engine requires due to their isolated gates. By using MOSFETs, the Arduino can manage the engine without being directly exposed to high power loads, preventing potential damage to the microcontroller. Overall, the MOSFET acts as the critical interface between low power tax signals from the Arduino and the high requirements of the DC engine, ensuring reliable reaction rate control for the project.

- DC Motor:

The DC engine of AI-driven traffic management systems is used to simulate vehicle speeds based on recognized speed limits. Engine speeds are controlled by the Arduino UNO via MOSFETs and vary according to the various speed limits identified by the system's software. This provides a concrete hardware-based representation of how vehicles adjust their speeds according to traffic regulations. Due to fluctuations in the voltage supplied to the engine, the system shows actual adjustments to the speed limit changes and AHMS the intelligent vehicle operation. The DC Engine illustrates a practical application of computer vision integration and physical control in traffic management. Ultimately, it serves as a proof of concept for automatic speed regulation in intelligent transport systems.

- Buzzer:

The AI-driven traffic management system buzzer provides hearing warnings for traffic violations. You can hear it when the system recognizes a driver without a helmet. Also, in the summer, the vehicle will become active when the vehicle exceeds the speed limit defined by the software. This audible feedback will be immediately notified to the authorities or nearby people. Combined with visual adaptation, summer improves the immediacy and effectiveness of warnings. By providing an immediate sound signal, the system ensures that any potential violations are immediately recognized. This will contribute to faster responses and improved road safety.

B. Software Requirements:

- Python(Programming Language):

Python is used in the AI-Powered Traffic Management System for several key tasks. It powers the computer vision aspect, utilizing libraries like OpenCV and deep learning models such as YOLOv8 to detect license plates and helmet-wearing status from images. Python, along with TensorFlow or Keras, is also employed to identify road speed signs from a live webcam feed. The extracted data, including license plate numbers and speed limits, is then transmitted to the Arduino Uno via serial communication using the PySerial library. Additionally, Python manages the graphical user interface (GUI) using Tkinter and handles data using Pandas and NumPy. Therefore, Python serves as the backbone for the software components of the system, integrating image processing, data analysis, and communication with the hardware.

- OpenCV(for image and video processing):

Python is used in the AI-Powered Traffic Management System for several key tasks. It powers the computer vision aspect, utilizing libraries like OpenCV and deep learning models such as YOLOv8 to detect license plates and helmet-wearing status from images. Python, along with TensorFlow or Keras, is also employed to identify road speed signs from a live webcam feed. The extracted data, including license plate numbers and speed limits, is then transmitted to the Arduino Uno via serial communication using the PySerial library. Additionally, Python manages the graphical user interface (GUI) using Tkinter and handles data using Pandas and NumPy. Therefore, Python serves as the backbone for the software components of the system, integrating image processing, data analysis, and communication with the hardware.

- YOLOv8(for helmet and license plate detection): Yolov8 immediately looks most effective as a Model 8 for real-time detection of elements on AI-driven website traffic control devices. Identifies and extracts the registration code number from the image. The device also uses the Yolov8 to determine whether the motorcyclist is wearing a helmet. By processing webcam feeds, the system can hire an online online system and trip over violations. This actual identification function is extremely important for computer aided site visitors in the system. The pace and accuracy of Yolov8 makes it suitable for quick violations for visitors.

- Tensorflow/Keras(for road sign classification model):

Tensorflow and Keras are used to create and educate deep getting to know models to recognize

avenue veloc- ity symptoms from stay webcams. Keras simplifies the development method and offers a excessive ranked API for the shape and training of neuronal networks, whilst Tensorflow acts as a backend for numerical calculations. The trained version is integrated into Python software to interpret real-time video inputs. This way, the gadget can mechanically recognize speed limits. by using these gear, the gadget as it should be identifies speed limits. that is vital for car speed law.

- Tkinter(for GUI interface):

TKINTER is used to create graphics cartridge interfaces (GUIs) for AI-based website traffic-controlled devices. The machine provides a visible surface to the user who can interact with it. The GUI shows real-time facts, such as license plate recognition amount and speed limit. TKINTER enables interactive factors such as buttons and show home windows. Integrate the Severa components of your gadget directly into your Person-Nice software. This GUI simplifies system operation and persecution with visitors.

- Pandas(for handling license plate database):

Pandas is employed in AI-pushed traffic management systems to manipulate and examine databases containing la- bels. store legitimate license plate numbers in a dependent layout. that is likely a CSV record that can be without problems processed by way of pandas. The device can make use of pandas to search for precise variety plates and carry out statistical analysis at the amassed statistics. This streamlines the process of creating records calls and enables greater powerful management of these calls. In summary, pandas gives tools for organizing and analyzing facts, that's essential for powerful traffic tracking.

- Numpy(for numerical operations):

Numpy is utilized in AI-based internet website traffic manage devices and implements an excellent numerical approach to typical performance. This manner you could procedure the photograph statistics. it's miles used for miles using OpenCV and makes use of mathematical manipulation of pixel values. Numpy arrays allow faster calculations than conventional Python lists. Multidimensional arrays are feasible, which might be extremely essential for photo processing. The CEO simplifies the numerical operations required for a laptop. talk to and document the evaluation.

- PySerial(for communication with Arduino):

PySerial allows verbal exchange some of the Python software program application and the Arduino Uno. It transmits detected license plate numbers and speed limits from the laptop to the Arduino. The Arduino then uses this information to control the DC motor and display statistics at the liquid crystal show. PySerial acts as a bridge, allowing the software to ship commands to the hardware. with out PySerial, the Python code might not be capable of interface with the Arduino. This serial conversation ensures that the hardware additives reply as it have to be to the software program software's detections.

- Pillow(for image display in Tkinter GUI):

Pillow (PIL) is used for image display within the Tkinter GUI. It allows the system to show images from the webcam feed or stored files directly in the GUI. Pillow helps convert images into a format Tkinter can understand and display. This is useful for visualizing the input being processed by the system. It supports various image for- mats, ensuring compatibility with different image sources. Overall, Pillow enhances the GUI by enabling image visualization.

- Jupyter Notebook/PyCharm(Python IDEs used during development):

In the AI-driven traffic management system, jupyter note- books and pycharm are both utilized as development environments, although they serve different functions. Jupyter notebooks shine in the initial stages of development, providing an interactive environment for prototyping and experimenting with individual components, such as the yolov8 model for object detection or the cnn model for speed sign recognition. The notebook environment enables developers to write and execute code in small, manageable units, making it easier to test, debug, and refine algorithms. It also promotes inline visualizations, which are especially beneficial when training and assessing machine learning models. Conversely, Python is employed during the later stages of development, where the emphasis is on seamlessly integrating all the individual components into a unified software application.

- CSV file(for storing license plate database):

The csv document within the AI-powered web site website online site visitors manage device includes the database of license plates. It organizes and stores the data of detected license plate numbers in a primarily based way. Pandas is hired to cope with and control this csv record, facilitating inexperienced information retrieval and evaluation.

This permits on hand searching and statistical assessment of the accumulated license plate statistics. The csv document guarantees the prolonged- time period storage and easy retrieval of registration code records, facilitating tracking and enforcement activities.

VI. ADVANTAGES AND APPLICATIONS

A. *Advantages:*

- Real-time web page traffic Rule Enforcement the use of AI.
- Automated Detection of Helmet Violations and License Plates.
- Seamless integration with Arduino for bodily indicators and presentations.
- First-class character-oriented GUI for image upload, detection, and monitoring.
- Mild-weight and Scalable Answer with CSV-based totally total facts control.

B. *Applications:*

- Traffic tracking of the Web site at intersections and highways.
- Automatic Helmet Detection for 2-Wheeler Protection Enforcement.
- Clever Surveillance in Parking hundreds and Toll booths.
- Detection of the actual street signal in clever vehicles.
- License plate identity for regulation Enforcement and Violation tracking.

VII. CONCLUSION

This project presents an integrated, AI-powered solution for real-time traffic rule enforcement and vehicle monitoring using advanced computer vision and deep learning techniques. By combining the strengths of YOLOv8 for helmet and license plate detection and TensorFlow/Keras for road sign classification, the system ensures high accuracy and rapid detection of violations such as not wearing helmets and overspeeding. The use of OpenCV enables efficient image and video processing, while the GUI built with Tkinter offers a user-friendly interface for interaction and visualization. Pandas and CSV file integration streamline data management by storing and retrieving license plate details, and PySerial allows smooth communication with Arduino for displaying alerts and status updates on hardware modules like LCD displays. This system can significantly assist traffic authorities in enforcing road safety rules, reducing manual monitoring efforts, and promoting compliance among commuters. It can also be extended to smart city infrastructure for broader deployment in urban transportation management. With real-time monitoring and automation, the project not only contributes to enhanced road safety but also supports the development of intelligent transportation systems. Overall, this project demonstrates how soft- ware and hardware integration can bring meaningful change in traffic enforcement through technological innovation.

VIII. FUTURE SCOPE

The AI-Powered traffic control device has sizable capability for future development. The device could be increased for real-time car monitoring, enabling complete tracking of site visitors glide and congestion. Integration with cloud structures could allow for centralized data garage and evaluation, offering treasured insights for urban making plans and traffic optimization. moreover, the system should contain superior analytics to expect traffic patterns, proactively regulate velocity limits, and optimize visitors signal timings. the combination of wireless verbal exchange technologies like 5G would enhance real-time data transmission and permit seamless connectivity with other smart town infrastructure. usual, these improvements should lead to a more efficient, safer, and responsive site visitors management surroundings.

REFERENCES

[1] Aboah, A., Wang, B., Bagci, U., Adu-Gyamfi, Y. (2023). ”Real-time Multi-Class Helmet Violation Detection Using Few-Shot Data Sampling Technique and YOLOv8.” arXiv preprint arXiv:2304.08256.

[2] Laroca, R., Zanlorensi, L. A., Gonc¸alves, G. R., Todt, E., Schwartz, W. R., Menotti, D. (2019). ”An Efficient and Layout-Independent Automatic License Plate Recognition System Based on the YOLO Detector.” arXiv preprint arXiv:1909.01754.

[3] Yang, Y., Liu, S., Ma, W., Wang, Q., Liu, Z. (2018). ”Efficient Traffic-Sign Recognition with Scale-aware CNN.” arXiv preprint arXiv:1805.12289.

[4] Wei, C., Tan, Q., Qing, R., Zeng, G., Wen, G.

(2023). ”Fast Helmet and License Plate Detection Based on Lightweight YOLOv5.” Sensors, 23(9), 4335.

[5] Vaikunth, M., Dejey, D., Vishaal, C., Balamurali, S. (2024). ”Optimizing Helmet Detection with Hybrid YOLO Pipelines: A Detailed Analysis.” arXiv preprint arXiv:2412.19467.

[6] Agarwal, A., Singhal, G., Kumar, S., Kumar, J. (2023). ”Helmet Detection and Number Plate Recognition for Safety and Surveillance System.” International Journal of Research in Engineering, Science and Management, 6(3), 94–98.

[7] Gurram, V. R., Gandla, A., Veldurthi, J., Dugyala, R., Mohammed, K. A., Swathi, B., Sobti, R., Kumar, A. (2024). ”A Comprehensive Review on Helmet Detection and Number Plate Recognition Approaches.” E3S Web of Conferences, 507, 01075.

[8] D., G., Nayagam, R. D., Raj, V. A., Kamaladhas, M. D., Priya, M. S., S., K. (2024). ”Detection of Helmet and License Plate Using Machine Learning.” International Journal of Intelligent Systems and Applications in Engineering.

[9] Venkateswarlu, K., Chiranjeevi, K., Ramesh, A. (2023). ”YOLO Based Advanced Smart Traffic Assistance Platform for Number Plate and Helmet Detection.” International Journal of Research in Applied Science and Engineering Technology.

[10] M., Vaikunth, D., Dejey, C., Vishaal, S., Balamurali. (2024). ”Optimizing Helmet Detection with Hybrid YOLO Pipelines: A Detailed Analysis.” arXiv preprint arXiv:2412.19467.