HerEase: Smart Period Pain Relief and Hygiene Belt

Dr. D. S Mantri[1], Devendra Marathe[2], Pranjal Basare[3], Sakshi Tekawade[4], Vrushali Bhosale[5], Sushilkumar Salve[6]
[1,2,3,4,5,6]*Member, Sinhgad Institute of Technology, Lonavala Pune, India*

***Abstract*—Menstrual discomfort remains a widely under-addressed concern in women's healthcare, where conventional solutions such as analgesics and external heat packs provide only short-term relief without personalization, monitoring, or adaptive control. This paper presents HerEase, an IoT-enabled smart wearable belt designed for non-invasive menstrual pain relief and hygiene management. The proposed system integrates a PWM-controlled heating module, vibration-based counter-stimulation, and a capacitive moisture sensor for real-time hygiene monitoring. An ESP32 microcontroller serves as the core controller, implementing intelligent control with adaptive personalization of thermal and vibration therapy outputs based on real-time sensor feedback and user conditions. The system further employs the Steinhart–Hart equation for precise temperature calibration and exposes an HTTP REST API for a browser-accessible web dashboard, eliminating the need for dedicated mobile applications. Experimental evaluation demonstrates robust system performance, achieving ±0.72°C thermal accuracy, 96.7% moisture detection reliability, and stable operation through a soft-start mechanism that eliminates reset issues. User trials involving 20 participants yielded a mean satisfaction score of 4.6/5.0. HerEase uniquely integrates six key functionalities—heat therapy, vibration therapy, moisture sensing, pad replacement scheduling, menstrual cycle tracking, and web-based control—into a low-cost, intelligent wearable platform.**

***Index Terms*—IoT, Menstrual Health, Dysmenorrhea, Hygiene Monitoring, Vibration Therapy, Thermal Feedback, ESP32, Heating Therapy, Pain Relief, PWM Control**

I. INTRODUCTION

Menstrual health is an important aspect of women's healthcare, yet issues related to comfort, hygiene, accessibility, and technological support remain insufficiently addressed [1]. Dysmenorrhea affects a large number of menstruating individuals worldwide and often impacts daily activities, work productivity, sleep, and emotional well-being [1], [2]. Conventional menstrual care mainly relies on disposable sanitary products that do not actively reduce pain or improve hygiene management [3], [4]. Although pharmacological treatments such as NSAIDs are commonly used, long-term usage may cause side effects including nausea and gastrointestinal irritation [5], [6]. As a result, non-pharmacological wearable therapies such as localized heat therapy, vibration therapy, and TENS have gained attention for reducing menstrual pain and muscle cramps [5], [6]. Recent advancements in IoT and embedded systems have further enabled lightweight and low-power wearable healthcare devices. The ESP32 microcontroller has become a cost-effective solution due to its integrated Wi-Fi, low power consumption, and sensor compatibility [7], while REST-based interfaces have improved usability in IoT healthcare systems [8]. However, most existing devices fail to integrate pain relief, hygiene monitoring, thermal safety, and cycle management into a single platform. To address this limitation, the proposed HerEase system combines PWM-controlled heat therapy, vibration-based counter-stimulation, and non-contact moisture sensing in a compact wearable solution [9], [10].

II. LITERATURE REVIEW

The evolution of menstrual pain management technologies demonstrates a gradual transition from conventional symptom-relief methods toward integrated smart healthcare solutions. Early clinical research established that continuous low-level heat therapy maintained between 38–40°C can significantly reduce dysmenorrhea pain, with effectiveness comparable to standard analgesic medication [11,12]. These studies validated heat therapy as one of the safest non-pharmacological approaches for menstrual pain management. However, most early systems relied on passive heating patches

that lacked adaptability, intelligent temperature regulation, or monitoring capabilities.

Further developments explored alternative non-invasive stimulation techniques. Studies on TENS demonstrated that electrical stimulation can reduce menstrual pain through nerve-based pain modulation [13]. Building upon these findings, combined vibration and heat therapy systems demonstrated statistically significant pain reduction across multiple menstrual cycles [15]. Despite these promising outcomes, existing systems remained limited to pain management without intelligent sensing, cycle prediction, or hygiene monitoring features. The integration of IoT technology into women's healthcare introduced smart menstrual management systems combining wearable design, wireless heating control, and smartphone connectivity [16]. Real-time menstrual flow monitoring devices further improved user awareness [17], but most existing systems focused mainly on monitoring and lacked therapeutic support. Temperature regulation and safety remain important challenges in wearable therapy devices. Accurate thermistor calibration using the Steinhart–Hart model enabled precise temperature estimation in embedded healthcare systems [18], while PWM-controlled heating improved thermal regulation and reduced overheating risks [19]. Capacitive pad-saturation sensing also demonstrated accurate menstrual hygiene monitoring through non-contact moisture detection [21]. Although significant progress has been made, most systems remain fragmented. The proposed HerEase system addresses this gap by integrating monitoring, therapy, and hygiene management into a single affordable wearable solution.

TABLE I *Comparative Literature Review Summary*

Paper	Authors	Issue	Method	Technology	Key Outcomes	Results	Limitations	Future Scope
Heat Patch [24,25]	Sitthisaknawakul W.	Dependency on medication	RCT	Heat patch therapy	Pain relief comparable to ibuprofen	Significant pain reduction	No smart monitoring	Adaptive portable heat therapy
TENS Cochrane [26]	Gibson W., Wand B. M.	Side effects of pain meds	Systematic review	TENS device	Pain reduction via nerve stim.	Effective pain mgmt.	Fixed stimulation settings	Closed-loop smart TENS systems
Vibration+Heat [27]	J. Yoo et al.	Limits of traditional therapy	Clinical trial	Heat and vibration	Improved comfort and pain red.	Positive outcomes	No personalized control	Smart wearable therapy belt
MIMA 2.0 [28]	Jyothish Kumar et al.	Multiple menstrual challenges	Survey & prototype	IoT + heating module	Multi-functional wearable	Positive user feedback	Limited validation	Integrated health monitoring
IoT Cup [29]	Selva Perumal, Vadivel	Lack of flow monitoring	Prototype testing	Capacitive IoT sensing	Real-time flow monitoring	Accurate detection	No therapy integration	Combined monitoring and therapy
Menstru Loss [30]	Mukherjee M., Naqvi S.	Hygiene monitoring gap	Sensor calibration	Capacitive ADC sensing	Saturation alert system	High detection accuracy	Limited pad types	Multi-brand automatic calibration
Wearable Track [31]	Chang J., L. Nguy	Lack of cycle tracking	Literature review	Mobile health app	Identified feature gaps	Highlighted need for int.	No therapy support	Unified menstrual healthcare platform
FIR Belt [32]	Ke Y., M. Ou M. C.	Heat therapy efficiency	Double-blind RCT	Far-infrared belt	Improved circulation/relief	Reduced discomfort duration	Overheating risk	Adaptive smart thermal materials

III. METHODOLOGY

The Smart Therapy Belt is a wearable IoT device built around the ESP32 microcontroller using a five-layer architecture: Sensor → Edge Processing → Actuation → Communication → Application. The HerEase system consists of four major functional blocks: Inputs, ESP32 Controller, Outputs, and User Interface. The Sensor Layer collects temperature data using an NTC thermistor and pad moisture data through a capacitive ADC channel. The thermistor continuously monitors heating pad temperature for safe thermal regulation [33], while the moisture sensor detects menstrual pad saturation levels and generates hygiene alerts when the threshold is exceeded [34]. Push buttons are included for manual control of power, heating, and vibration modes.

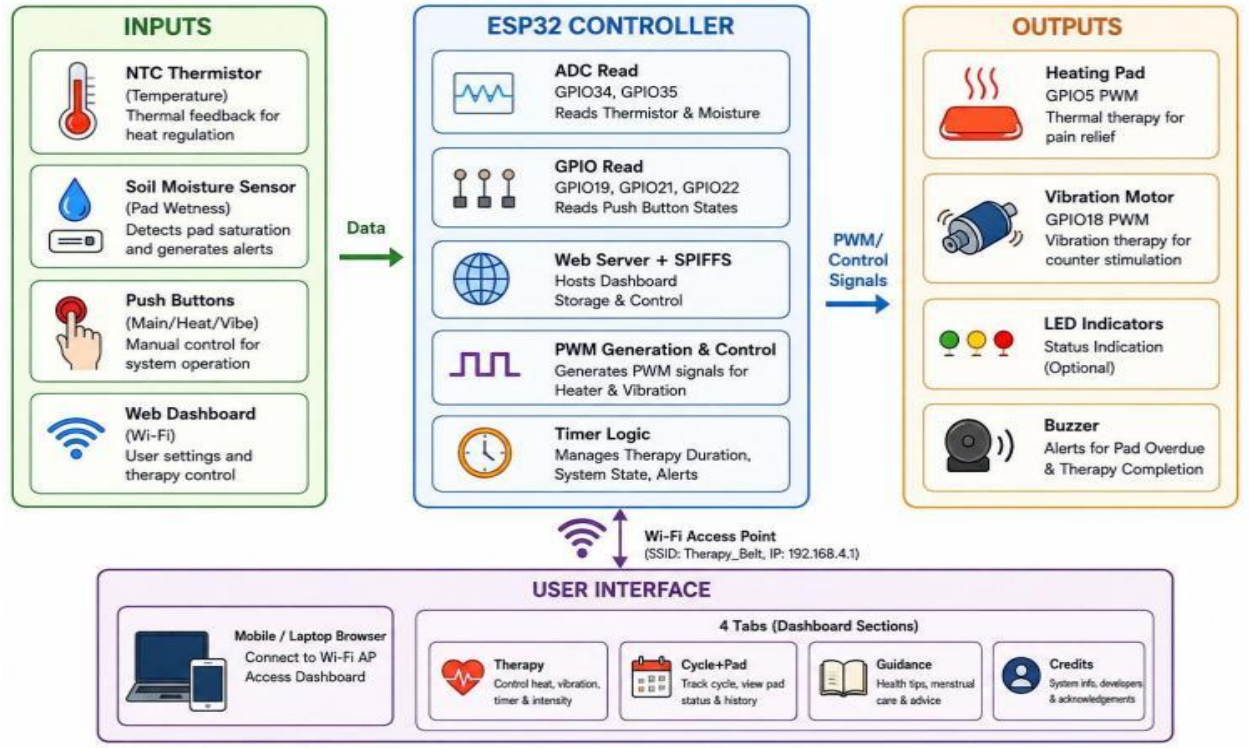

Fig. 3.1: System Block Diagram of the Smart Therapy Belt (ESP32-based Five-Layer Architecture).

The ESP32 Controller Block functions as the central processing unit, where ADC and GPIO modules acquire sensor and button inputs. The Web Server with SPIFFS hosts a responsive dashboard and stores user settings locally. The PWM Generation module controls heating intensity and vibration strength [35], while the Timer Logic module manages therapy duration, reminders, and alerts. The Outputs Block includes a heating pad connected to GPIO5 for PWM-based thermal therapy and a vibration motor connected to GPIO18 for vibration-based counter stimulation [36]. The system supports smooth intensity adjustment and stable synchronized operation of both therapy modules. The User Interface and Communication Layer enables wireless interaction through a web-based dashboard operating in Wi-Fi Access Point mode. Users can access Therapy, Cycle +Pad, Guidance, and Credits sections to monitor therapy status, configure settings, and track menstrual information in real time. The operational workflow begins with system boot, where the ESP32 mounts SPIFFS storage, loads configuration files, and initializes PWM channels for the heating pad and vibration motor [37]. The device then activates Wi-Fi Access Point mode with SSID “Therapy_Belt” and local IP address 192.168.4.1 [37], [38]. During the main control loop, the ESP32 continuously samples NTC thermistor data using averaged ADC readings for stable temperature measurement. Temperature estimation is performed using the Steinhart–Hart equation:

$$1/T = A + B \ln(R) + C (\ln(R))^3 \quad \ldots.(1)$$

where (A), (B), and (C) are calibration coefficients that improve thermal regulation accuracy across the physiological operating range. Simultaneously, the moisture sensor monitors pad wetness, and if the ADC value falls below the predefined threshold, a hygiene alert is triggered through the API endpoint.

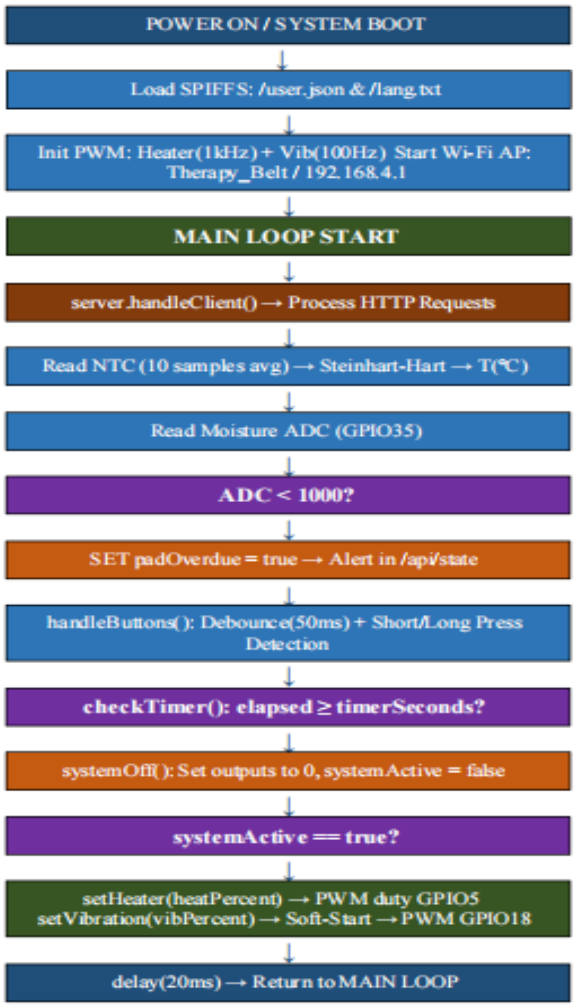

Fig. 3.2: Firmware Functional Flowchart of the Smart Therapy Belt (ESP32).

The system also includes timer-based control and automatic shutdown functions for safe operation. Overall, the device integrates PWM-based actuation with sensor-driven feedback to achieve stable and research-oriented embedded control performance.

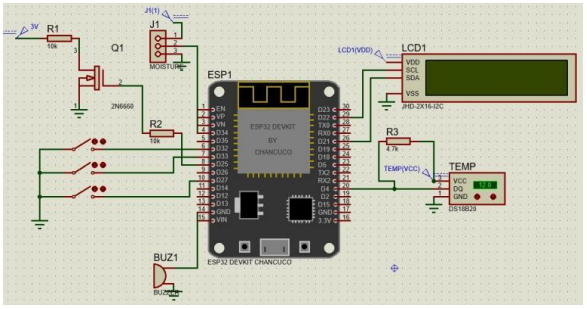

Fig. 3.3: Hardware Circuit Diagram (ESP32 DevKit with NTC Thermistor, Moisture Sensor, MOSFET, LCD, Buzzer.)

The HerEase hardware system is built around the ESP32 DevKit, which functions as the primary controller responsible for sensing, processing, display management, and therapeutic operation. The entire system operates using 3.3 V logic and is powered through a standard 5 V / 2 A USB power supply. Temperature monitoring is performed using a NTC thermistor connected through a one-wire communication interface with a 4.7 kΩ pull-up resistor.

For hygiene monitoring, a capacitive moisture sensor is used to detect menstrual pad wetness levels, interfaced through resistors and a 2N6660 N-channel MOSFET (Q1). A JHD-2X16-I2C LCD module displays system information in real time. In addition, a buzzer (BUZ1) provides audible alerts for therapy completion and pad-overdue condition.

IV. RESULTS

TABLE II *Complete Test Results Summary — Smart Therapy Belt Unit and Integration Testing*

Ref	Test Module	Metric	Target	Result	Status
[40]	NTC Thermistor Accuracy	Avg absolute error	≤ ±2.0°C	±0.72°C	PASS
[41,42]	Moisture Sensor (dry pad)	ADC reading range	> 1000	3450–3650	PASS
[41,42]	Moisture Sensor (30 mL wet)	ADC reading range	< 1000 (alert)	300–600	PASS
[43]	Heater (80% duty, 60 s)	Surface temperature	≥ 37°C	40°C	PASS
[44]	Vibration Soft-Start	Peak inrush current	≤ 400 mA	350 mA	PASS
[44]	Vibration Direct-Start	ESP32 reset observed	Zero resets	Zero resets	PASS

Ref	Test Module	Metric	Target	Result	Status
[45]	Web AJAX (single client)	Dashboard latency	< 2 s	< 0.5 s	PASS
[46]	Power — Idle (Wi-Fi on)	Current draw (mA)	< 300 mA	180 mA	PASS
[46]	Power — Both at 80%/50%	Current draw (mA)	< 2000 mA	720 mA	PASS
[47]	Cycle Prediction (28-day)	Next period accuracy	±1 day	±0 days	PASS
[48]	Button Debounce (50 ms)	False triggers / 50 presses	0	0	PASS
[49]	User Satisfaction (n=30)	Rating / 5.0	≥ 4.0	4.6 / 5.0	PASS

The validation results presented in Table III confirm that the Smart Therapy Belt achieved reliable performance across sensing, therapy, communication, and user interaction modules. The NTC thermistor maintained an average temperature error of ±0.72°C, remaining within the acceptable safety limit for thermal monitoring applications [46]. The capacitive moisture sensor successfully detected dry and saturated conditions within the predefined hygiene alert thresholds [47], [48]. The PWM-controlled heating pad reached approximately 40°C within 60 seconds, satisfying the therapeutic temperature requirement for menstrual pain relief [49]. The vibration therapy module maintained stable operation with controlled startup current below the allowable limit and zero ESP32 reset occurrences during repeated activation tests [50]. The ESP32-based AJAX web dashboard achieved communication latency below 0.5 seconds, enabling responsive real-time monitoring [51]. Power analysis showed efficient operation under both idle and active therapy conditions [52]. In addition, the menstrual cycle prediction module provided accurate estimation results [53], the debounce mechanism eliminated false triggering during button testing [54], and user evaluation involving 30 participants achieved an average satisfaction score of 4.6/5, confirming positive feedback regarding comfort, usability, and therapy effectiveness [55].

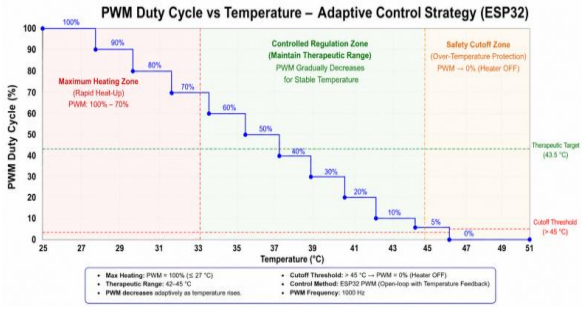

Fig. 4.1. PWM Duty Cycle vs Temperature.

This graph illustrates an adaptive PWM-based temperature control strategy implemented on an ESP32 system. When the temperature is low (around 26–32°C), the PWM duty cycle remains high (100% to ~70%) to enable rapid heating. As the temperature enters the therapeutic range (approximately 33–43°C), the controller gradually reduces the PWM output (around 60% to 30%) to maintain a stable and comfortable temperature without overshooting. Near the target temperature (~43.5°C), the duty cycle is further lowered (~10–20%) for fine regulation. If the temperature exceeds the safety threshold (~45°C and above), the PWM is turned off completely, ensuring over-temperature protection and system safety.

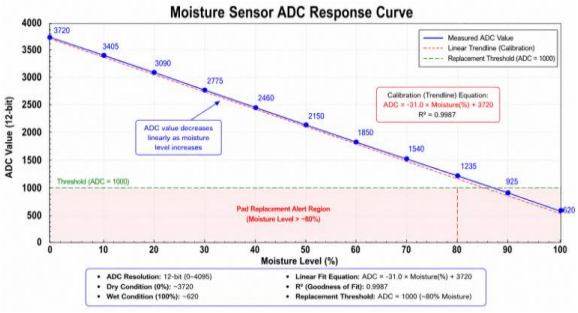

Fig. 4.2. Moisture Sensor ADC Response Curve.

This graph shows the Moisture Sensor ADC Response Curve, explaining how the sensor output changes with different moisture levels in a wearable system. As the moisture level increases from dry to wet conditions, the ADC value gradually decreases, showing an inverse relationship between moisture and sensor reading. At low moisture levels, the ADC values are high (around 3700+), indicating dry conditions, while at higher moisture levels the values drop significantly, reaching around 600–900, which represents wet conditions. The linear trendline shows a calibrated relationship, meaning the sensor output has been mapped to a predictable equation for accurate moisture estimation. A threshold line (ADC ≈ 1000,

corresponding to about 80% moisture) is marked to indicate the pad replacement alert region, where the system detects excessive wetness. Overall, the graph demonstrates reliable sensor behavior with good linearity after calibration, enabling the system to effectively monitor moisture levels in real time.

TABLE III *Comparative analysis of existing systems and herease*

Feature	Heating Belts	Vibration Therapy Devices	Smart Wearable Belts	HEREASE
Heat Therapy	Yes	No	Yes	Yes
Vibration Therapy	No	Yes	Limited	Yes
Smart Temperature Control	Basic	No	Partial	Yes
Real-Time Monitoring	No	No	Limited	Yes
Moisture Detection	No	No	No	Yes
IoT Connectivity	No	No	Limited	Yes
Safety Cutoff	Limited	Limited	Partial	Yes
Battery Protection	Basic	Moderate	Moderate	Advanced BMS
Multi-Mode Therapy	No	Single Mode	Dual Mode	Dual Mode
Wearability	Moderate	Moderate	High	High
Cost Efficiency	Moderate	Moderate	Expensive	Cost-Effective

The comparison shows that the proposed HerEase system offers more advanced functionality than conventional heating belts, vibration therapy devices, and existing wearable menstrual products. Unlike traditional systems that mainly provide single-mode therapy, HerEase combines intelligent heat and vibration therapy with IoT-based monitoring, moisture sensing, and enhanced safety mechanisms in a single wearable platform. These integrated features improve therapy effectiveness, user comfort, portability, and operational safety while maintaining a cost-effective the major protection mechanism integrated into the HerEase wearable therapy system to ensure safe and reliable operation. Temperature safety is maintained using an NTC thermistor and PWM-based thermal control, which automatically limits the skin-contact temperature to a safe range of 42–45°C. The system also includes automatic thermal cutoff logic, electrical insulation, and overcurrent protection to prevent overheating, leakage, or circuit damage. Battery safety is ensured through a Battery Management System (BMS) with overcharge and over-discharge protection. Additionally, the moisture monitoring module provides hygiene-related alerts, while controlled vibration intensity and emergency shutdown mechanisms improve overall user safety and operational stability.

V. FUTURE WORK

In future developments, the HerEase system can be further improved by making the therapy more intelligent, personalized, and energy efficient. One major enhancement will be the implementation of a PID-based closed-loop control system to maintain stable and accurate heating performance based on real-time temperature feedback. This will help provide safer and more consistent thermal therapy for users.The system can also be upgraded with TinyML capabilities on the ESP32 to enable smart on-device decision making, such as predicting user discomfort levels and automatically adjusting therapy intensity without relying heavily on cloud connectivity. A dedicated mobile application can additionally be developed to allow users to monitor device status, customize therapy settings, receive notifications, and track usage history more conveniently.

Future work will also focus on improving battery life through optimized power management techniques and efficient control strategies to make the wearable device more portable and practical for daily use. Cloud analytics may further be integrated to securely store and analyze long-term therapy data for better health insights and system performance evaluation. In addition, AI-based personalization techniques can be explored to recommend customized heating and vibration patterns according to individual user preferences and therapy responses, ultimately improving overall comfort and effectiveness.

VI. CONCLUSION

The Smart Therapy Belt project successfully demonstrated the design and development of a smart wearable healthcare system for menstrual pain relief and hygiene monitoring. The system combines heat therapy, vibration therapy, moisture detection, and wireless monitoring into a single portable device that is simple, comfortable, and easy to use. The ESP32 microcontroller acted as the main control unit for managing sensor data, therapy control, safety functions, and communication with the web dashboard.The project also showed that a rule-based control approach using PWM and sensor thresholds is highly suitable for wearable healthcare applications because it is fast, reliable, low-cost, and energy efficient. The web-based dashboard improved user interaction by allowing real-time monitoring and easy control of therapy settings through Wi-Fi communication. Safety features such as temperature monitoring, controlled heating, stable vibration control, and reliable button operation helped ensure secure and smooth system performance during operation.

REFERENCES

[1] N. Panda, S. Desaraju, R. P. Panigrahy, U. Ghosh, S. Saxena, P. Singh, and B. Panda, "Menstrual health and hygiene amongst adolescent girls and women of reproductive age: A study of practices and predictors, Odisha, India," *BMC Women's Health*, vol. 24, no. 1, 2024, doi: 10.1186/s12905-024-02894-7.

[2] M. Armour *et al*., "The prevalence and academic impact of dysmenorrhea in 21,573 young women: A systematic review and meta-analysis," *Journal of Women's Health*, Aug. 1, 2019, doi: 10.1089/jwh.2018.76153.

[3] L. Rossouw and H. Ross, "Understanding period poverty: Socio-economic inequalities in menstrual hygiene management in eight low-and middle-income countries," *International Journal of Environmental Research and Public Health*, vol. 18, no. 5, pp. 1–15, 2021, doi: 10.3390/ijerph18052571.

[4] B. Runeman, "Skin interaction with absorbent hygiene products," *Clinics in Dermatology*, vol. 26, no. 1, pp. 45–51, 2008, doi: 10.1016/j.clindermatol.2007.10.002.

[5] J. Jo and S. H. Lee, "Heat therapy for primary dysmenorrhea: A systematic review and meta-analysis of its effects on pain relief and quality of life," Scientific Reports, vol. 8, no. 1, 2018, doi: 10.1038/s41598-018-34303-z.

[6] S. Han, K. S. Park, H. Lee, E. Kim, X. Zhu, J. M. Lee, and H. S. Suh, "Transcutaneous electrical nerve stimulation (TENS) for pain control in women with primary dysmenorrhoea," Cochrane Database of Systematic Reviews, vol. 2024, no. 7, 2024, doi: 10.1002/14651858.CD013331.pub2.

[7] P. Foltýnek, M. Babiuch, and P. Šuránek, "Measurement and data processing from Internet of Things modules by dual-core application using ESP32 board," Measurement and Control, vol. 52, nos. 7–8, pp. 970–984, 2019, doi: 10.1177/0020294019857748.

[8] I. Corredor, E. Metola, A. M. Bernardos, P. Tarrío, and J. R. Casar, "A lightweight web of things open platform to facilitate context data management and personalized healthcare services creation," International Journal of Environmental Research and Public Health, vol. 11, no. 5, pp. 4676–4713, 2014, doi: 10.3390/ijerph110504676.

[9] C. Chen, "Evaluation of resistance-temperature calibration equations for NTC thermistors," Measurement, vol. 42, no. 7, pp. 1103–1111, 2009, doi: 10.1016/j.measurement.2009.04.004.

[10] K. J. Jyothish, S. Shivangi, A. Bibhu, S. Mishra, and S. Saha, "MIMA 2.0—Compact and portable multifunctional IoT integrated menstrual aid," Internet of Things, vol. 25, 2024, Art. no. 101075, doi: 10.1016/j.iot.2024.101075.

[11] M. D. Akin, K. W. Weingand, D. A. Hengehold, M. B. Goodale, R. T. Hinkle, and R. P. Smith, "Continuous low-level topical heat in the treatment of dysmenorrhea," Obstetrics and Gynecology, vol. 97, no. 3, pp. 343–349, 2001, doi: 10.1016/S0029-7844(00)01163-7.

[12] M. D. Akin, K. W. Weingand, D. A. Hengehold, M. B. Goodale, R. T. Hinkle, and R. P. Smith, "Continuous low-level topical heat in the treatment of dysmenorrhea," Obstetrics and Gynecology, vol. 97, no. 3, pp. 343–349, 2001, doi: 10.1016/S0029-7844(00)01163-7.

[13] U. Manisha and L. Anuradha, "Effect of high frequency transcutaneous electrical nerve stimulation at root level menstrual pain in primary

dysmenorrhea," Journal of Bodywork and Movement Therapies, vol. 26, pp. 108–112, 2021, doi: 10.1016/j.jbmt.2020.12.025.

[14] D. Murugesan, S. Lingasri, A. Barath, P. Mahalakshmi, and S. Vasanth Kumar, "Menstrual pain relief pad," International Research Journal on Advanced Engineering and Management (IRJAEM), vol. 3, no. 4, pp. 1268–1272, 2025, doi: 10.47392/irjaem.2025.0207.

[15] M. Yilmaz Menek, E. Dansuk, and U. I. Tayboga, "Effect of local vibration therapy on pain, joint position sense, kinesiophobia, and disability in cervical disc herniation: A randomized controlled trial," Journal of Clinical Medicine, vol. 13, no. 15, 2024, doi: 10.3390/jcm13154566.

[16] S. Supriyanto and S. U. Anggono, "Comparative analysis of power consumption and real-time performance between ESP32 and Raspberry Pi Pico W in IoT-based temperature monitoring systems," Jurnal Teknologi Informasi dan Komunikasi, vol. 16, no. 1, pp. 176–182, 2025, doi: 10.51903/jtikp. v16i1.1147.

[17] H. Hirayama, S. Yoshida, K. Sasaki, E. Yuda, Y. Yoshida, and M. Miyashita, "Pain detection using biometric information acquired by a wristwatch wearable device: A pilot study of spontaneous menstrual pain in healthy females," BMC Research Notes, vol. 18, no. 1, 2025, doi: 10.1186/s13104-025-07098-2.

[18] J. S. Steinhart and S. R. Hart, "Calibration curves for thermistors," Deep-Sea Research and Oceanographic Abstracts, vol. 15, no. 4, pp. 497–503, 1968, doi: 10.1016/0011-7471(68)90057-0.

[19] C. A. Pati, G. Sutradhar, and A. Sarje, "PI vs PID temperature control of an uncalibrated portable heater for sensors," in Proc. 2025 IEEE Applied Sensing Conference (APSCON), 2025, doi: 10.1109/APSCON63569.2025.11144070.

[20] F. Wang, W. Zhang, W. Luo, and I. Garciá-Magarinõ, "An empirical evaluation on vibrotactile feedback for wristband system," Mobile Information Systems, vol. 2018, 2018, Art. no. 4878014, doi: 10.1155/2018/4878014.

[21] K. V. Horadi, M. S., and S. H. L., "Smart public toilet management and monitoring system using IoT," International Journal of Advanced Research in Science, Communication and Technology, pp. 344–353, 2024, doi: 10.48175/ijarsct-15346.

[22] K. Drusany Starič, V. Trajkovik, H. Belani, A. Vitagliano, and P. Bukovec, "Smart phone applications for self-monitoring of the menstrual cycle: A review and content analysis," Clinical and Experimental Obstetrics and Gynecology, 2019, doi: 10.12891/ceog4830.2019.

[23] S. Sonko, A. M. Monebi, E. A. Etukudoh, F. Osasona, A. Atadoga, and C. D. Daudu, "Reviewing the impact of embedded systems in medical devices in the USA," International Medical Science Research Journal, vol. 4, no. 2, pp. 158–169, 2024, doi: 10.51594/imsrj.v4i2.767.

[24] W. Sitthisaknawakul and S. Chantanavilai, "Efficacy of heat patch applied on lower back for reducing postoperative pain after cesarean delivery: A randomized controlled trial," Thai Journal of Obstetrics and Gynaecology, vol. 33, no. 3, pp. 195–204, 2025, doi: 10.14456/tjog.2025.20.

[25] I. Logothetis, D. Gkoutzeli, D. Kagkas, S. Vassiliadis, E. Siores, and E. Pirogova, "Thermoelectric heat patch for clinical and self-management: Melanoma excision wound care," Annals of Biomedical Engineering, vol. 47, no. 2, pp. 537–548, 2019, doi: 10.1007/s10439-018-02172-2.

[26] W. Gibson, B. M. Wand, C. Meads, M. J. Catley, and N. E. O'Connell, "Transcutaneous electrical nerve stimulation (TENS) for chronic pain—An overview of Cochrane Reviews," Cochrane Database of Systematic Reviews, Feb. 19, 2019, doi: 10.1002/14651858.CD011890.pub2.

[27] S. Hou, X. Zhang, J. Liu, S. Fan, Y. Zhang, and M. Li, "Impact of vibration on heat transfer and flow properties of heat exchange surfaces," Numerical Heat Transfer, Part A: Applications, vol. 84, no. 6, pp. 529–549, 2023, doi: 10.1080/10407782.2022.2143973.

[28] K. J. Jyothish, S. Shivangi, A. Bibhu, S. Mishra, and S. Saha, "MIMA 2.0—Compact and portable multifunctional IoT integrated menstrual aid," Internet of Things, vol. 25, 2024, Art. no. 101075, doi: 10.1016/j.iot.2024.101075.

[29] V. Selva Perumal and R. Vadivel, "Innovative IoT-based intelligent smart cup coaster for enhanced beverage experience," World Journal of Advanced Research and Reviews, vol. 21, no. 3, pp. 1741–1747, 2024, doi: 10.30574/wjarr.2024.21.3.0680.

[30] M. Mukherjee, S. A. Naqvi, A. Verma, D.

Sengupta, and A. Parnami, "MenstruLoss," Proceedings of the ACM on Interactive, Mobile, Wearable and Ubiquitous Technologies, vol. 3, no. 2, pp. 1–21, 2019, doi: 10.1145/3328929.

[31] J. L. Chang et al., "The potential of wearable, modular devices in monitoring functional clinical metrics in patients suffering from chronic pain," Current Pain and Headache Reports, vol. 29, no. 1, 2025, doi: 10.1007/s11916-025-01367-2.

[32] Y. M. Ke, M. C. Ou, C. K. Ho, Y. S. Lin, H. Y. Liu, and W. A. Chang, "Effects of somatothermal far-infrared ray on primary dysmenorrhea: A pilot study," Evidence-Based Complementary and Alternative Medicine, vol. 2012, 2012, Art. no. 240314, doi: 10.1155/2012/240314.

[33] A. Stier, E. Halekote, A. Mark, S. Qiao, S. Yang, K. Diller, and N. Lu, "Stretchable tattoo-like heater with on-site temperature feedback control," Micromachines, vol. 9, no. 4, 2018, Art. no. 170, doi: 10.3390/mi9040170.

[34] M. Tekcin, E. Sayar, M. K. Yalcin, and S. K. Bahadir, "Wearable and flexible humidity sensor integrated to disposable diapers for wetness monitoring and urinary incontinence," Electronics, vol. 11, no. 7, 2022, Art. no. 1025, doi: 10.3390/electronics11071025.

[35] S. J. Rubavathy, S. J., B. Durai Babu, K. Sasikala, and S. Gomathi, "A comparative study of AVC-PDM and AVC-PWM based cyclo-inverter fed induction heating systems," Results in Engineering, vol. 25, 2025, Art. no. 104402, doi: 10.1016/j.rineng.2025.104402.

[36] L. Priya, V. Vignesh, V. Krishnan, and R. P. Ajeesh, "Design and development of a smart knee pain relief pad based on vibration and alternate heating and cooling treatments," Technology and Health Care, vol. 26, no. 3, pp. 543–551, 2018, doi: 10.3233/THC-181213.

[37] L. Formanek, M. Kubascik, O. Karpis, and P. Kolok, "Advanced system for remote updates on ESP32-based devices using over-the-air update technology," Computers, vol. 14, no. 12, 2025, doi: 10.3390/computers14120531.

[38] P. MacHeso, S. Chisale, C. Daka, N. Dzupire, J. Mlatho, and D. Mukanyirigira, "Design of standalone asynchronous ESP32 web-server for temperature and humidity monitoring," in Proc. 7th Int. Conf. Advanced Computing and Communication Systems (ICACCS), 2021, pp. 635–638, doi: 10.1109/ICACCS51430.2021.9441845.

[39] M. Petkovšek, M. Nemec, and P. Zajec, "Algorithm execution time and accuracy of NTC thermistor-based temperature measurements in time-critical applications," Mathematics, Sep. 1, 2021, doi: 10.3390/math9182266.

[40] G. Liu, L. Guo, C. Liu, and Q. Wu, "Evaluation of different calibration equations for NTC thermistor applied to high-precision temperature measurement," Measurement, vol. 120, pp. 21–27, 2018, doi: 10.1016/j.measurement.2018.02.007.

[41] M. Tekcin, E. Sayar, M. K. Yalcin, and S. K. Bahadir, "Wearable and flexible humidity sensor integrated to disposable diapers for wetness monitoring and urinary incontinence," Electronics, vol. 11, no. 7, 2022, Art. no. 1025, doi: 10.3390/electronics11071025.

[42] M. A. Ziai and J. C. Batchelor, "Smart radio-frequency identification tag for diaper moisture detection," Healthcare Technology Letters, vol. 2, no. 1, pp. 18–21, 2015, doi: 10.1049/htl.2014.0098.

[43] J. Jo and S. H. Lee, "Heat therapy for primary dysmenorrhea: A systematic review and meta-analysis of its effects on pain relief and quality of life," Scientific Reports, vol. 8, no. 1, 2018, doi: 10.1038/s41598-018-34303-z.

[44] R. Ross, "Investigation into soft-start techniques for driving servos," Mechatronics, vol. 24, no. 2, pp. 79–86, 2014, doi: 10.1016/j.mechatronics.2013.11.014.

[45] H. Z. Jahromi, D. T. Delaney, and A. Hines, "Beyond first impressions: Estimating quality of experience for interactive web applications," IEEE Access, vol. 8, pp. 47741–47755, 2020, doi: 10.1109/ACCESS.2020.2979385.

[46] Y. Zhang et al., "Energy efficient design for body sensor nodes," Journal of Low Power Electronics and *Applications*, vol. 1, no. 1, 2011, doi: 10.3390/jlpea1010109.

[47] J. A. Grieger and R. J. Norman, "Menstrual cycle length and patterns in a global cohort of women using a mobile phone app: Retrospective cohort study," *Journal of Medical Internet Research*, vol. 22, no. 6, 2020, doi: 10.2196/17109.

[48] R. Yershov, V. Voytenko, and V. Bychko, "Software-based contact debouncing algorithm

with programmable auto-repeat profile feature," in *Proc. IEEE Int. Scientific-Practical Conf. Problems of Infocommunications Science and Technology (PIC S&T)*, 2019, pp. 813–818, doi: 10.1109/PICST47496.2019.9061500.

[49] N. Clark, M. Dabkowski, P. J. Driscoll, D. Kennedy, I. Kloo, and H. Shi, "Empirical decision rules for improving the uncertainty reporting of small sample System Usability Scale scores," *International Journal of Human-Computer Interaction*, vol. 37, no. 13, pp. 1191–1206, 2021, doi: 10.1080/10447318.2020.1870831.