Solar Based Electric Vehicle Using Wireless Transmission

Prof. Roselin Mothukuri[1], Poorvi Ugaragol[2], Saniyakausar M Bijapur[3]
[1]*Guide, Professor, Department of Electronics & Communication Engineering, Rural Engineering College Hulkoti Gadag*
[2,3]*Project Associate, Department of Electronics & Communication Engineering, Rural Engineering College Hulkoti Gadag*

***Abstract*—The charging of electric vehicles (EVs) could undergo a dramatic shift with the advent of WPT (wireless power transfer) technology. There are a number of advantages to integrating WPT with the grid and renewable energy sources like solar power, including less pollution, cheaper energy, and more reliable electricity. Wireless power transmission for electric car charging utilizing sun or grid energy is discussed in this abstract, which offers a review of the several factors involved. After a brief overview of WPT and its background, the various WPT technologies for Pv and grid integration are detailed. Later on, it describes how to optimize distance, alignment, and frequency three aspects that impact WPT efficiency for grid and solar integration. In the upgrowing world of modern cars people refer e-vehicle rather than normal diesel and petrol car, but still there is constant fear of charging station at every location, so, to avoid facing such consequence we are planning to setup a solar Pannel at each and every station so that e-vehicle can get charged at any point. We have built this setup with a transmitting and receiving coil so that e-vehicle can get charged easily and we can reduce the pollution leading to global warming.**

I. INTRODUCTION

More efficient and environmentally friendly charging options are in high demand due to the rising popularity of electric cars (EVs). A potential replacement for conventional cable charging methods is WPT (wireless power transfer) technology, which does away with the requirement for physical links among the infrastructure for charging and the electric vehicle. The use of WPT in conjunction with the grid and renewable energy sources like solar power has several benefits, such as lowering energy prices, increasing grid stability, and reducing carbon footprint. Their liability and power availability might be improved with this combinational system, which also offers advantages for peak shaving and load control. Using solar and grid electricity, this study outlines the many facets of wireless power transmission for charging electric automobiles. The article starts off by providing a concise overview of WPT technology's background and outlining the various WPT options for solar or grid integration. Next, it delves into the specifics of optimizing WPT for solar or grid integration by looking at variables like frequency, distance, and alignment, all of which impact efficiency. Solar power for WPT has several advantages, such as less carbon emissions, cheaper energy, and more stable grid operation, but there are also some disadvantages to solar integration, such as solar power's unpredictability and the necessity of energy storage solutions. Enhanced power availability and reliability, as well as the possibility of load control and peak shaving, are some of the advantages of grid integration that are covered in the article.

A solar wireless electric vehicle charging system project is an innovative solution that aims to provide an efficient and sustainable way of charging electric vehicles (EVs). The project is based on the idea of using solar energy to power wireless charging stations, which can be installed at various locations, such as parking lots, residential areas, and public spaces. The need for such a project arises from the increasing popularity of electric vehicles, which are becoming an essential component of the transition to a low-carbon economy. However, the lack of charging infrastructure and the limited range of EVs pose significant challenges to their widespread adoption. Electric vehicles are getting more and more prevalent throughout many countries. These automobiles can range in size from little to large, like electric bicycles or buses.

1.1. Applications of Solar Wireless EV Power Transmission

1.1.1.Transportation (Roadways & Highways)

- Solar panels embedded in roads or mounted along highways generate electricity.
- Wireless charging pads beneath the road surface transmit power to EVs while driving.
- This reduces range anxiety and eliminates frequent charging stops.



Figure:1.1.1 Transportation (Roadways & Highways)

1.1.2.1.1.2. Public Transit (Buses & Trams)

- Bus stops and tram stations equipped with solar-powered wireless chargers.
- Vehicles recharge while waiting for passengers, ensuring continuous operation.
- Cuts down on fuel costs and emissions in urban areas.



Figure:1.1.2. Public Transit Buses

1.1.3.Residential & Commercial Parking

- Solar carports with wireless charging pads in parking lots.
- EVs charge automatically when parked, no need for cables.
- Ideal for offices, malls, and residential complexes.



Figure:1.1.3 Residential & Commercial Parking

1.1.4.Industrial & Logistics (Warehouses & Ports)

- Solar-powered wireless charging for delivery trucks, forklifts, and port vehicles.
- Ensures uninterrupted logistics operations with clean energy.
- Reduces dependency on fossil fuels in heavy transport hubs.



Figure:1.1.4 Industrial & Logistics

1.2. PROBLEM STATEMENT

The rise of electric vehicles (EVs) signals a promising shift towards sustainable transportation, offering a solution to combat climate change and reduce reliance on fossil fuels. However, challenges persist in the charging infrastructure, with conventional stationary charging stations causing significant waiting times for vehicle owners. This hinders the seamless integration of EVs into mainstream transportation systems.

1.3. OBJECTIVES

Wireless power transfer (WPT) is an advanced power transfer system without any physical wires. It was invented by Nikola Tesla more than 100 years ago. When current passes through a conductor or copper coil with high frequency then it generates electromagnetic field around it. This part we can consider as wireless power transmitter. When conductor or copper coil affected by electromagnetic field, it generates current. This part we can consider as wireless power receiver. There are some smart applications like wireless mobile charger, EV charging and robotics used wireless power transfer system.

II. LITERATURE SURVEY

1. J. C. Ferreira, V. et.al [1] "presented a double-coupled system (DCS) for electric car battery charging. An intermediate coupler is located between the primary coil and the secondary sensor and acts as a switch. Efficiency is increased by sharing all the losses between the branches overall.
2. P. Venugopal, P. Bauer [2] Describe a new design approach where design factors are considered in the selection of coreless IPT parameters such as ideal number of coils, compensation capacitors and frequency. If the right design is chosen, there is a chance to deliver high power with high efficiency.
3. S. R Kutwad, S. Gaur et.al [3] Explain a two-way IPT system that uses weak magnetic couplings to enable easy wireless power transfer between two sides that are separated by an air gap. It is challenging to design and regulate a system without an accurate mathematical model. State variables created a dynamic model. This model is a common tool for controller design as well as steady-state and transient analysis of IPT systems
4. B. Revathi A. Ramesh, et.al [4] it is possible to extend the power transmission distance between the transmitter and the receiver coil by installing intermediate repeaters in the IPT system, accordingly. It is carefully determined where the repeater should be placed between the transmitter and the receiver. For producing the same amount of electricity, the efficiency of the two alternative setups varies greatly. If the repeater is placed closer to the transmitter than the receiver, the efficiency will improve. A gap of 10-15 cm between the road surface and the bottom of the electric vehicle is significant for larger vehicles such as trucks or buses, so certain techniques are required to increase the charging distance depending on the gaps. To achieve this, repeaters are inserted.

III. METHODOLOGY

BLOCK DIAGRAM

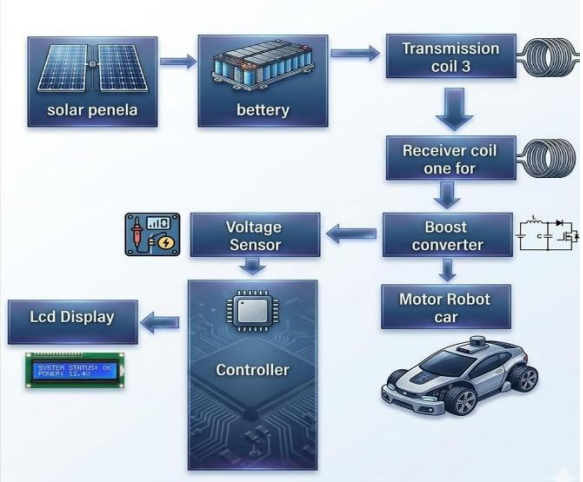

Figure:3.0: Block diagram

Here, Arduino reads output power which is coming from wireless power receiver. Arduino displays voltage of receiver on LCD display. Using this system, we will monitor how much voltage generated through wireless power transfer.

3.1. WORKING PRINCIPLE

This solar-powered wireless charging system operates through three primary, interconnected phases: energy harvesting and storage, resonant inductive power transmission across an air gap, and output voltage regulation combined with digital data monitoring. The process begins at the solar panel array, where incoming sunlight hits the photovoltaic cells, freeing electrons to generate Direct Current (DC) electricity via the

photovoltaic effect. To mitigate the natural fluctuations of solar energy caused by weather changes or night cycles, this harvested power is continuously routed to a rechargeable battery bank, which stabilizes the output and serves as the main chemical energy reservoir.

To initiate wireless transmission, the stable DC voltage from the battery is fed into a high-frequency switching oscillator network. This circuit transforms the static DC electricity into a high-frequency Alternating Current (AC), which is injected directly into Transmission Coil 3. As this high-frequency current cycles through the primary transmission coil, it creates an oscillating magnetic field that propagates through the surrounding air gap. When the Motor Robot Car aligns with the charging station, its internally mounted Receiver Coil captures these fluctuating magnetic field lines. Through the principles of Faraday's Law of Electromagnetic Induction and near-field resonant inductive coupling, this cutting magnetic flux induces a localized Alternating Current within the receiver coil's windings. Because this air-gap transmission incurs natural electromagnetic losses, the induced voltage drops and must be conditioned; it is first passed through a high-speed diode bridge rectifier to convert the AC back into a rough DC signal.

This low-voltage DC is then fed into a high-efficiency Boost Converter topology, which utilizes a switching inductor, diode, and capacitor network to step up and tightly stabilize the voltage to the exact, higher rating required by the vehicle's propulsion electronics and drive motors. Simultaneously, a high-precision analog Voltage Sensor continuously monitors the output terminals of the boost converter. It steps down the operating voltage into safe logic-level signals and feeds them into the system Controller. The controller's internal firmware processes these real-time analog-to-digital conversions, calculates system safety metrics, and instantly updates the LCD Display via data communication lines to show live telemetry data, system statuses, and operational voltages to the end user.

3.2. HARDWARE AND SOFTWARE

3.2.1.HARDWARE

1. Solar Panel:

Converts sunlight into electrical energy and supplies power to the EV wireless charging system. It helps in reducing electricity cost and pollution.

2. Battery:

Stores the energy produced by the solar panel for later use. It provides continuous power supply during low sunlight or night time.

3. Controller:

Controls and manages the charging and power distribution in the system. It protects the battery and other components from damage.

Transmission and Receiving Coil:

Transfers electrical power wirelessly from the charging station to the EV. The transmission coil sends energy and the receiving coil collects it.

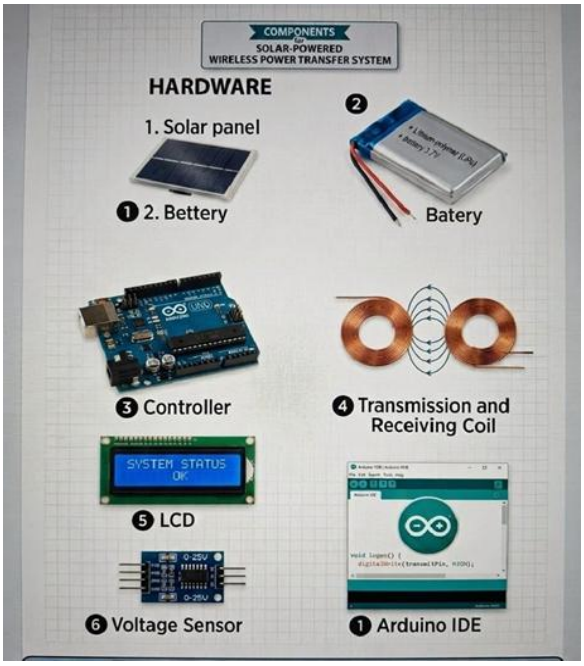

Figure:3.2: Components for Solar Based EV Power Transmission

4. LCD:

Displays system information such as voltage, charging status, and battery level. It helps users monitor the working condition easily.

5. Voltage Sensor:

Measures the voltage level in the circuit and sends data to the controller. It helps in safe and efficient system operation.

3.2.2.SOFTWARE

1. Arduino IDE:

Software used to write, edit, and upload programs to

the controller. It provides an easy platform for coding and testing.

2. Embedded C:
Programming language used for developing the controller program. It helps the hardware components work automatically and efficiently.

3.3. HARDWARE POWER SUPPLY UNIT

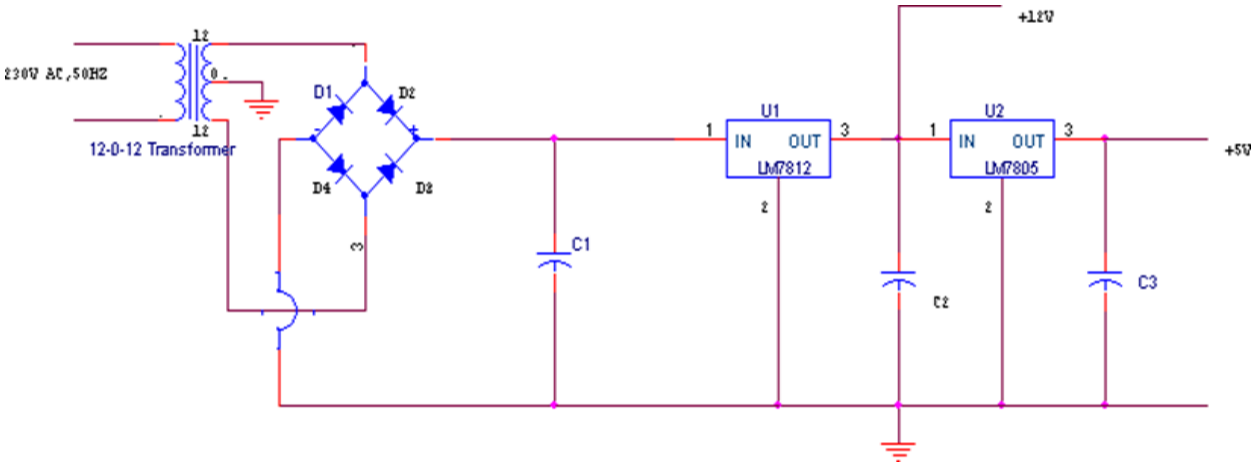

Figure:3.3.1 Hardware power supply unit

In every project we need different voltages for different circuits. So, we need to construct different power supply of different voltages employing different voltage transformers, rectifier circuits, filter circuits and regulator circuits.
This type of construction requires many components (transformers, capacitors, regulators etc.). So, the size of the power supply becomes bulky and costly. To overcome above
disadvantages by using regulator IC'S the different voltages (12V, 9V. etc.) can be obtained with
only one transformer.
The circuit diagram of Dual power supply is shown in the figure 3.1. The function of each component of the circuit is explained below.

The circuit consists of following stages.
1. Transformer
2. Rectifier
3. Filter
4. Regulator

3.3.1.TRANSFORMER:
It is an electrical device which transfers the power from one winding to the other winding with isolation. All the electronic gadgets work for less voltage (normally 3V to 12V). So, a step-down transformer is used, whose function is to step down the AC voltage from 230V to required voltage depending on the need. In this project 12V-0-12V is used. The output of transformer is 12V AC which is connected to the diodes for rectification.

3.3.2.RECTIFIER CIRCUIT:
It employs diodes, which converts AC voltage into DC voltage. The output of rectifier circuit is not a pure DC. It also consists of some AC components, which is called ripples. In order to remove these AC components, filter circuits are employed. So, the output of rectifier circuit is fed to the filter circuit (capacitor).

3.3.3.FILTER CIRCUIT:
Filter circuit employs electrolytic capacitors in order to remove the AC components. As we know the capacitor does not allow DC components to pass through it because it offers high reactance to the DC component. And offers less reactance to the AC component, so all AC components will be bypasses through the capacitors to ground.

3.3.4.REGULATOR:
Regulator is an electronic circuit whose function is to keep output always constant though the input is varied. In this project the three terminal IC regulators of 7812 & 7805 is used for providing output DC voltages. E.g.,

7809, the number 78 represents the positive regulator IC and 09 represents the output voltage i.e., output is 12V.

3.4. Component List:

Table:3.6.0: Components list for solar based EV power transmission

SL NO.	Component Name	Specification	Value	Quantity
1.	Transformer	Step-down	12-0-12	1
2.	Diode	D1 D2 D3 D4	IN4001 IN4001 IN4001 IN4001	1 1 1 1
3.	Capacitors	C1 C2 C3	1000uF,25V 0.01uF 0.01uF	1 1 1
4.	Regulator	U1 U2	LM7812 LM7805	1 1

3.5. Overview

The Arduino Uno is a microcontroller board based on the ATmega328 (datasheet). It has 14 digital input/output pins (of which 6 can be used as PWM outputs), 6 analog inputs, a 16 MHz ceramic resonator, a USB connection, a power jack, an ICSP header, and a reset button. It contains everything needed to support the microcontroller; simply connect it to a computer with a USB cable or power it with a AC-to-DC adapter or battery to get started.

The Uno differs from all preceding boards in that it does not use the FTDI USB-to-serial driver chip. Instead, it features the Atmega16U2 (Atmega8U2 up to version R2) programmed as a USB-to-serial converter. Revision 2 of the Uno board has a resistor pulling the 8U2 HWB line to ground, making it easier to put into DFU mode.

Revision 3 of the board has the following new features:

- 1.0 pinout: added SDA and SCL pins that are near to the AREF pin and two other new pins placed near to the RESET pin, the IOREF that allow the shields to adapt to the voltage provided from the board. In future, shields will be compatible both with the board that use the AVR, which operate with 5V and with the Arduino Due that operate with 3.3V. The second one is a not connected pin, that is reserved for future purposes.
- Stronger RESET circuit.
- ATmega 16U2 replace the 8U2.

"Uno" means one in Italian and is named to mark the upcoming release of Arduino 1.0. The Uno and version 1.0 will be the reference versions of Arduino, moving forward. The Uno is the latest in a series of USB Arduino boards, and the reference model for the Arduino platform; for a comparison with previous versions, see the index of Arduino boards.

3.6. SUMMARY

- Microcontroller: ATmega328
- Operating Voltage: 5V
- Input Voltage (recommended): 7-12V
- Input Voltage (limits): 6-20V
- Digital I/O Pins: 14 (of which 6 provide PWM output)
- Analog Input Pins: 6
- DC Current per I/O Pin: 40 mA
- DC Current for 3.3V Pin: 50 mA
- Flash Memory: 32 KB (ATmega328) of which 0.5 KB used by bootloader
- SRAM: 2 KB (ATmega328)
- EEPROM: 1 KB (ATmega328)
- Clock Speed: 16 MHz

3.7. Power

The Arduino Uno can be powered via the USB connection or with an external power supply. The power source is selected automatically.

External (non-USB) power can come either from an AC-to-DC adapter (wall-wart) or battery. The adapter can be connected by plugging a 2.1mm center-positive plug into the board's power jack. Leads from a battery can be inserted in the Gnd and Vin pin headers of the POWER connector.

The board can operate on an external supply of 6 to 20 volts. If supplied with less than 7V, however, the 5V pin may supply less than five volts and the board may be unstable. If using more than 12V, the voltage regulator may overheat and damage the board. The recommended range is 7 to 12 volts.

The power pins are as follows:

- VIN. The input voltage to the Arduino board when it's using an external power source (as opposed to 5 volts from the USB connection or other regulated power source). You can supply voltage through this pin, or, if supplying voltage via the power jack, access it through this pin.

- 5V. This pin outputs a regulated 5V from the regulator on the board. The board can be supplied with power either from the DC power jack (7 - 12V), the USB connector (5V), or the VIN pin of the board (7-12V). Supplying voltage via the 5V or 3.3V pins bypasses the regulator, and can damage your board. We don't advise it.
- 3V3. A 3.3volt supply generated by the on-board regulator. Maximum current draw is 50 mA.
- GND. Ground pins.

3.8. Memory

The ATmega328 has 32 KB (with 0.5 KB used for the bootloader). It also has 2 KB of SRAM and 1 KB of EEPROM (which can be read and written with the EEPROM library).

3.9. Input and Output

Each of the 14 digital pins on the Uno can be used as an input or output, using pin Mode (), digital Write (), and digital Read () functions. They operate at 5 volts. Each pin can provide or receive a maximum of 40 mA and has an internal pull-up resistor (disconnected by default) of 20-50 k Ohms.

In addition, some pins have specialized functions:

- Serial: 0 (RX) and 1 (TX). Used to receive (RX) and transmit (TX) TTL serial data. These pins are connected to the corresponding pins of the ATmega8U2 USB-to-TTL Serial chip.
- External Interrupts: 2 and 3. These pins can be configured to trigger an interrupt on a low value, a rising or falling edge, or a change in value. See the attach Interrupt () function for details.
- PWM: 3, 5, 6, 9, 10, and 11. Provide 8-bit PWM output with the analog Write () function.
- SPI: 10 (SS), 11 (MOSI), 12 (MISO), 13 (SCK). These pins support SPI communication using the SPI library.
- LED: 13. There is a built-in LED connected to digital pin 13. When the pin is HIGH value, the LED is on, when the pin is LOW, it's off.

The Uno has 6 analog inputs, labeled A0 through A5, each of which provide 10 bits of resolution (i.e., 1024 different values). By default, they measure from ground to 5 volts, though is it possible to change the upper end of their range using the AREF pin and the analog Reference () function.

Additionally, some pins have specialized functionality

- TWI: A4 or SDA pin and A5 or SCL pin. Support TWI communication using the Wire library.
- There are a couple of other pins on the board:
- AREF. Reference voltage for the analog inputs. Used with analog Reference ().
- Reset. Bring this line LOW to reset the microcontroller. Typically used to add a reset button to shields which block the one on the board.

3.10. Communication

The Arduino Uno has a number of facilities for communicating with a computer, another Arduino, or other microcontrollers. The ATmega328 provides UART TTL (5V) serial communication, which is available on digital pins 0 (RX) and 1 (TX). An ATmega16U2 on the board channels this serial communication over USB and appears as a virtual com port to software on the computer. The '16U2 firmware uses the standard USB COM drivers, and no external driver is needed. However, on Windows, a .inf file is required. The Arduino software includes a serial monitor which allows simple textual data to be sent to and from the Arduino board. The RX and TX LEDs on the board will flash when data is being transmitted via the USB-to-serial chip and USB connection to the computer (but not for serial communication on pins 0 and 1).

A Software Serial library allows for serial communication on any of the Uno's digital pins.

The ATmega328 also supports I2C (TWI) and SPI communication. The Arduino software includes a Wire library to simplify use of the I2C bus; see the documentation for details. For SPI communication, use the SPI library.

3.11. Programming

The Arduino Uno can be programmed with the Arduino software (download). Select "Arduino Uno from the Tools > Board menu (according to the microcontroller on your board). For details, see the reference and tutorials.

The ATmega328 on the Arduino Uno comes pre burned with a bootloader that allows you to upload new code to it without the use of an external hardware programmer. It communicates using the original STK500 protocol (reference, C header files).

You can also bypass the bootloader and program the microcontroller through the ICSP (In-Circuit Serial

Programming) header; see these instructions for details.
The ATmega16U2 (or 8U2 in the rev1 and rev2 boards) firmware source code is available.

The ATmega16U2/8U2 is loaded with a DFU bootloader, which can be activated by:

- On Rev1 boards: connecting the solder jumper on the back of the board (near the map of Italy) and then resetting the 8U2.
- On Rev2 or later boards: there is a resistor that pulling the 8U2/16U2 HWB line to ground, making it easier to put into DFU mode.

You can then use Atmel's FLIP software (Windows) or the DFU programmer (Mac OS X and Linux) to load a new firmware. Or you can use the ISP header with an external programmer (overwriting the DFU bootloader). See this user-contributed tutorial for more information.

3.12. Physical Characteristics
The maximum length and width of the Uno PCB are 2.7 and 2.1 inches respectively, with the USB connector and power jack extending beyond the former dimension. Four screw holes allow the board to be attached to a surface or case. Note that the distance between digital pins 7 and 8 is 160 mil (0.16"), not an even multiple of the 100-mil spacing of the other pins

IV. PIN DIAGRAM

4.0 LCD OPERATION:

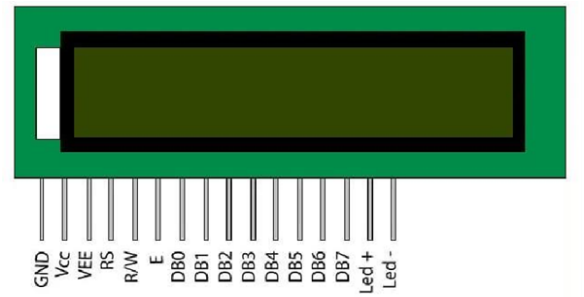

Figure:4.0.1 LCD operation pin diagram

In recent years the LCD is finding widespread use replacing LEDs (seven segment LEDs or other multi segment LEDs).

This is due to the following reasons:
1. The declining prices of LDCs.
2. The ability to display numbers, characters, and graphics. This is in contrast to LEDs, which are limited to numbers and a few characters.
3. Incorporation of a refreshing controller into the LDC, thereby relieving the CPU of the task of refreshing the LCD. In contrast, the LED must be refreshed by the CPU (or in some other way) to keep displaying the data.
4. Ease of programming for characters and graphics.

4.1. LCD pin descriptions: The LCD discussed in this section has 14 pins

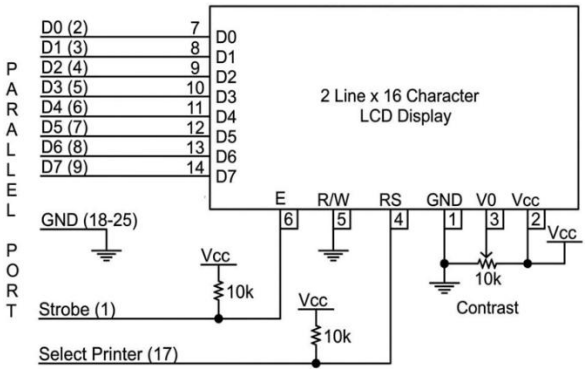

Figure:4.1.0 LCD pin description

4.1.1.VCC, VSS, and VEE:
While V_{CC} and V_{SS} provide +5V and ground, respectively, V_{EE} is used for controlling LCD contrast. RS, register select. There are two very important registers Inside the LCD. The RS pin is used for their selection as follows. If RS=0, the instruction command code register is selected, allowing the user to send a command such as clear display, cursor at home, etc. IF RS=1 the data register is selected, allowing the user to send data to be displayed on the LCD.

4.1.2.R/W (read/write):
R/W input allows the user to write information to the LCD or read information from it. R/W=1 when reading; R/W=0 when writing.

4.1.3.E(enable):
The enable pin is used by the LCD to latch information presented to its data pins. When data is supplied to data pins, a high-to-low pulse must be applied to this pin in order for the LCD to latch in the data present at the data pins. This pulse must be a minimum of 450 ns wide.

4.1.4.D0 - D7:

The 8-bit data pins, D0 - D7, are used to send information to the LCD or read the contents of the LCD's internal registers. To display letters and numbers, we send ASCII codes for the letters A - Z, a - z, and numbers 0 - 9 to these pins while making RS=1.There are also instruction command codes that can be sent to the LCD to clear the display or force the cursor to the home position or blink the cursor.

We also use RS = 0 to check the busy flag bit to see if the LCD is ready to receive information. The busy flag is D7 and can be read when R/W=1 and RS = 0, as follows: if R/W = 1, RS = 0. When D7 = 1 (busy flag = 1), the LCD is busy taking care of internal operations and will not accept any new information. When D7 = 0, the LCD is ready to receive new information.

4.1.5.Pin Descriptions for LCD:

Table:4.1.5 LCD pin description

Pin	Symbol	I/O	Description
1	VSS	--	Ground
2	VCC	--	+5V power supply
3	VEE	--	Power supply to control contrast
4	RS	I	RS=0 to select command register, RS=1 to select data register
5	R/W	I	R/w-0 for write, R/W=1 for read
6	E	I/O	Enable
7	DB0	I/O	The 8-bit data bus
8	DB1	I/O	The 8-bit data bus
9	DB2	I/O	The 8-bit data bus
10	DB3	I/O	The 8-bit data bus
11	DB4	I/O	The 8-bit data bus
12	DB5	I/O	The 8-bit data bus
13	DB6	I/O	The 8-bit data bus
14	DB7	I/O	The 8-bit data bus

5V 2A Wireless Charging Module with Power Coil

The XKT-412 5V 2A Wireless Charging Module with Power Coil is a high-performance wireless power transmission solution designed for efficient and safe charging.

With its compact and lightweight design, this module is perfect for integrating wireless charging capabilities into DIY projects, consumer electronics, and more. It ensures stable power delivery with enhanced safety features, making it a reliable choice for your wireless charging needs.

4.2. Features:

- High Efficiency: Delivers up to 2A output with minimal energy loss for faster wireless charging.
- Wide Input Range: Operates with a 5V DC input for universal compatibility.
- Compact Design: Small form factor allows easy integration into various systems.
- Safety Features: Includes overcharge, overcurrent, and temperature protection for safe and reliable operation.
- Stable Transmission: Comes with a high-quality power coil for seamless wireless energy transfer.

4.3. Specifications:

- Module Model: XKT-412
- Input Voltage: 5V DC
- Output Voltage: 5V DC
- Output Current: 2A (Max)
- Transmission Distance: ≤8mm

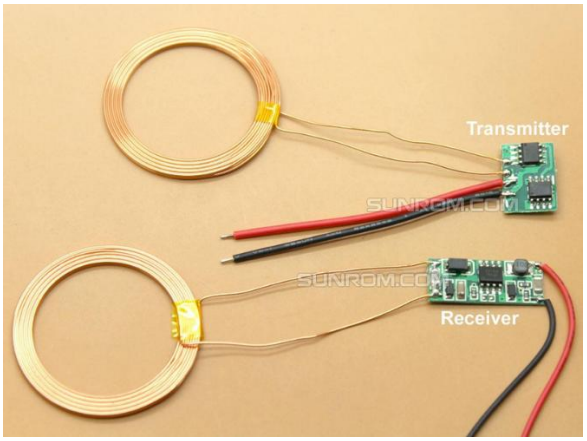

Figure:4.3.1 Wireless Power Transfer

4.4. Voltage Detection Sensor Module 25V

This is a simple but very useful module which uses a potential divider to reduce an input voltage by a factor of 5. The Voltage Detection Sensor Module 25V allows you to use the analog input of a microcontroller to monitor voltages much higher than it capable of sensing.

For example, with a 0-5V analog input range, you are able to measure a voltage up to 25V. This voltage sensor module also includes convenient screw terminals for easy and secure connection of a wire.

This module is based on the principle of resistive voltage divider design, can make the red terminal connector input voltage to 5 times smaller. Arduino analog input voltages up to 5 v, the voltage detection

module input voltage not greater than 5Vx5=25V (if using 3.3V systems, input voltage not greater than 3.3Vx5=16.5V).

Arduino AVR chips have 10-bit AD, so this module simulates a resolution of 0.00489V (5V/1023), so the minimum voltage of input voltage detection module is 0.00489Vx5=0.02445V.

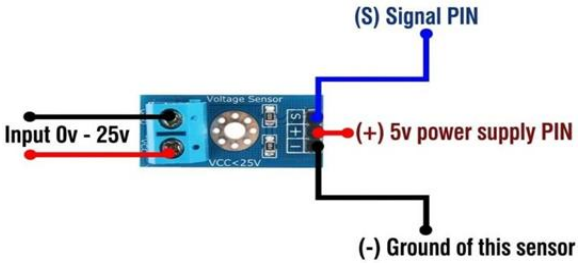

Figure:4.4.1 DC Voltage Sensor Module



Figure:4.4.2 DC Motor

4.5. L293D motor driver module

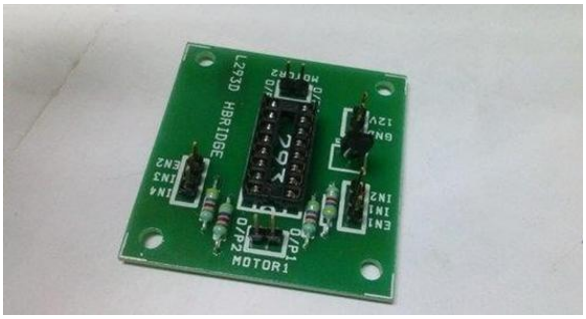

Figure:4.5.0 L293D motor driver module

4.5.1. Features

The L293D is a popular motor driver IC that is usable from 6 to12V, at up to 1A total output current. By itself, the IC is somewhat difficult to wire and use, but the Compact L293D Motor Driver makes it much more convenient to use.

4.5.2. Board Special Features

- Four motor direction indicator LEDS
- Schottky EMF-protection diodes
- Socket pin connectors for easy logic interfacing
- Enable pins are user accessible.

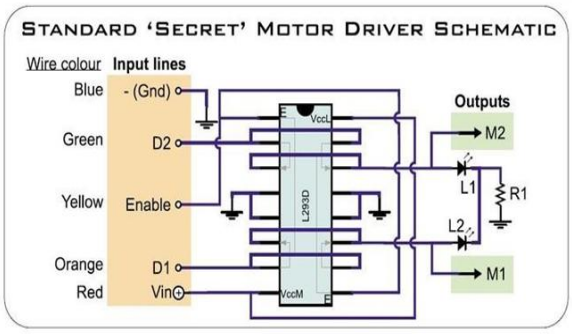

Figure:4.5.1 Standard Secret Motor Driver using L293D

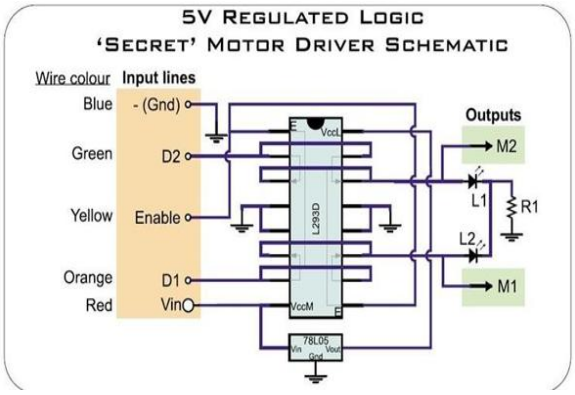

Figure:4.5.2 Secret Motor Driver 5v Regulated Logic using L293D

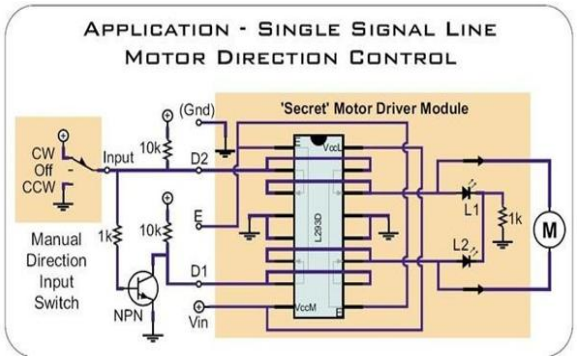

Figure:4.5.3 Single Signal Line Motor Direction Control using L293D

4.6. L298 Features

SGS THOMPSON DATASHEET CHARACTERISTICS

Logic / Motor supply maximum voltage	4.5V to 36V
Input & enable line voltage range	7V
Peak output current (nonrepetitive), t <= 100μS (per 2 channels)	±2.4A
Continuous output current (per 2 channels)	1.2A
Total continuous heat dissipation	4W
Maximum switching frequency (ie: PWM applications)	5kHz

Table:4.6.0 Logic Table for L293 (SGS THOMSON)

LOGIC TABLE

Inputs			
Enable	D1	D2	M1, M2 Output
H	H	H	Both outputs HIGH (motor brake)
H	L	L	Both outputs LOW (motor brake)
H	H	L	Current flow from M1 to M2 (rotates dir 1)
H	L	H	Current flow from M2 to M1 (rotates dir 2)
L	X	X	High impedance (motor coasts)

X = Doesn't matter
H = Logic High
L = Logic Low

4.7. BATTERY

12V 1.3AH Sealed Lead Acid Battery The 'Online' range of sealed lead acid batteries are maintenance free, valve regulated and leak proof ideally suited to all 'standby applications' There will be no loss in power output over the battery life. Low self-discharge of about 2-3% per month compared with 20-30% for more common battery systems. Quality construction with no compromise on materials to ensure a long service life. Low internal resistance means a high discharge rate. Wide operating temperature range operating between -15° C to +50 ° C when fully charged.

Applications

- Lighting Equipment
- Emergency Lighting
- Toys & Consumer Electronics
- Fire Alarm & Security Systems



Figure:4.7.1: 12V 1.3h Sealed lead acid (SLA) Battery

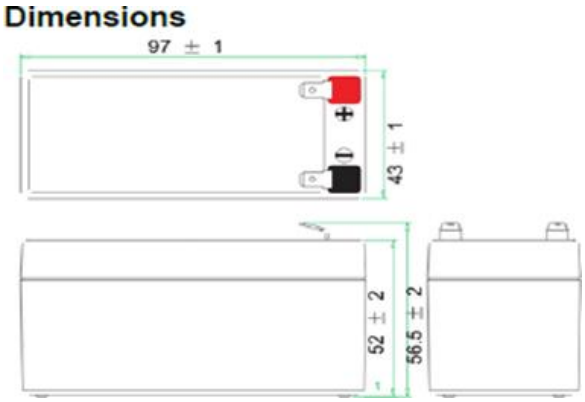

Figure:4.7.2: Dimensional Drawing of Rechargeable SLA Battery

4.8. Wheel Metal Chassis Black for Robotic



Figure:4.8.1 Wheel Metal Chassis Black for Robotic

Coated Metal chases for robots. Easy to mount the motors on place by using normal motor mount nut. It can either be used in skid steel configuration (4 motors) or differential configuration (2 rear wheels + 1 front castor wheel). The body contains perforated holes for easy mounting of various size circuit boards and other mechanical components. Length: 190mm Width: 105mm Height: 40mm

4.9. Smart Robot Car Wheels for Arduino

These wheels are commonly used components in Robotics. With an approximate diameter of 65mm and 26mm thickness, this Wheel is suitable for all BO motors. Can be used in our robot vehicles with the standard motor/gearbox fitting

4.9.1.Robot Wheel Features:

- 65mm diameter
- 26mm wide
- Rubber wheel on plastic hub
- Wheel is suitable for all BO motors

4.9.2.Robot Wheel Package:

- 1x 65mm Yellow Robot Wheel



Figure:4.9.1:1x 65mm Yellow Robot Wheel

V. 5.0 ARDUINO IDE

SOFTWARE

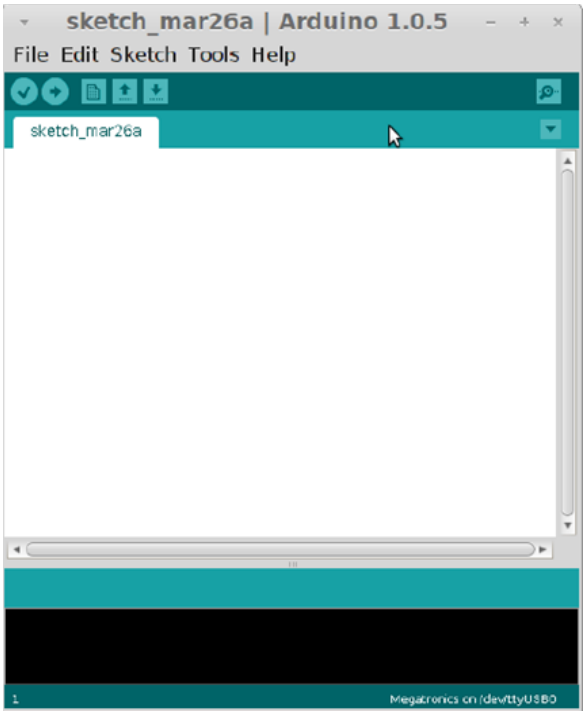

Figure:5.0.1 Arduino IDE Software

Arduino is an open-source project, enabling hobbyists to easily take advantage of the powerful Atmega chips. The Arduino IDE is the software where you can write code and upload it to the Atmega chip. The code is then executed on the chip.

Most 3D-printer electronics are Arduino-compatible, they use the Atmega chip and enable the user to upload their code using Arduino. This includes Megatronics, Minitronics and RAMPS. Before you can start using the electronics you need software 'firmware', that translates machine instructions (gcode) into actual movements. There are a few options here, including Marlin and Sprinter and Repetier. The actual firmware is not discussed in this document. You can use Arduino to upload this firmware onto your electronics. This document will guide you in the steps you need to take. To upload a firmware, you must first open the files using File → Open. Select the. ino file from the directory containing the firmware. Arduino will open several tabs with files.

Next step is to select the correct electronics board. From the Tools menu, locate the Board item. This item should include a few sub items, including Megatronics, Minitronics, Arduino mega 2560 (RAMPS with mega 2560) and Arduino Mega 1280 (RAMPS with mega1280). Select the board that fits your electronics. Also, we need to select the serial port the electronics is connected to. In the Tools menu, locate the Serial port item. This should include at least one item if the board is connected and the drivers are installed properly. If there are multiple items here, you need to find out which is the correct one by unplugging the board and checking which port was removed.

Once you have set the board and serial port, you can upload the firmware by pressing File→ Upload. Arduino will try to compile the firmware, if any errors occur the process will stop and you will need to fix the errors before trying again. Once compilation is complete, the actual upload will start. This may take a minute for alarge sketch. Arduino

You can actually 'talk' to the firmware using the Serial monitor. Make sure the correct serial port is selected and locate the Serial monitor button.

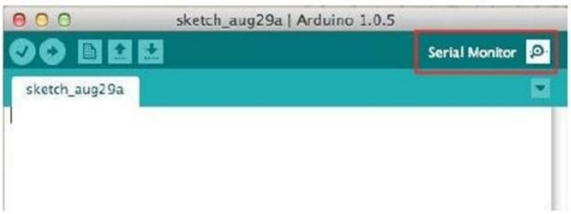

Figure:5.0.2 Arduino IDE Interface

This will open a new window:

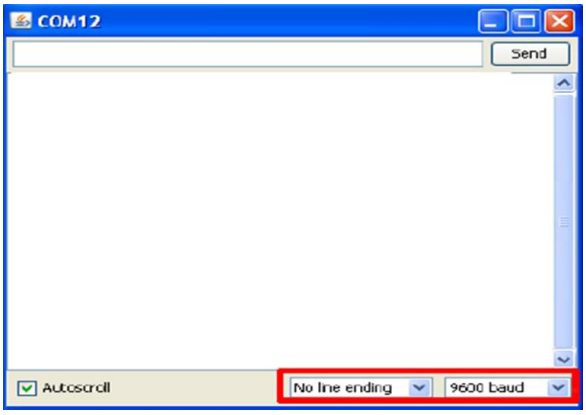

Figure:5.0.3 Arduino Serial Monitor

Make sure the line ending is set to newline and the baud rate corresponds to your firmware (115200 mostly), or you will get gibberish. You can enter a command in the upper box (M105 for example), this will result in response from the firmware. The temperature in this case.

VI. CONCLUSION

With the development of EV technology, charging infrastructure and grid integration areas, EV popularity is expected to grow significantly over the next decade. In this context, wireless charging has sparked widespread attention as it has no spark, is locally independent and operates in a vacuum. This paper explains in detail the wireless charging technology for EVs. This paper elaborates on EVs wireless charging technology. technology offers the potential for better power efficiency, lower environmental impacts, lower life cycle costs, and greater comfort and safety operating benefits.

In conclusion, solar wireless EV charging systems offer numerous advantages over traditional EV charging methods. They are environmentally friendly, cost effective and easy to install and maintain. They also provide greater flexibility and convenience to electric vehicle drivers as they allow charging in locations that may not have access to the power grid. However, implementing solar wireless charging systems for electric vehicles requires careful planning and execution. A comprehensive feasibility study, site survey and system design are necessary to ensure the system is optimized for the intended use. In addition, choosing the right technology and methodology can help ensure the success of the project.

ACKNOWLEDGEMENT

The satisfaction & euphoria that accompany the successful completion of any task would be incomplete without the mention of the people who make it possible, whose Constant guidance & encouragement crowned our effort with success.

We take this opportunity to express to our profound gratitude to our respected

Principal Dr. V.M. Patil for his constant support & encouragement.

We are also grateful to Head of Department Dr Suganda P of ECE Department providing us absolute facilities because of which our project has been successful.

We would like to take this opportunity to express our extreme gratitude towards our project guide Prof. ROSELIN MOTHUKURI Department of Electronics & Communication for her invaluable guidance, advice and support throughout the project. Her motivation and help have been a source of great inspiration to us.

Last but not least we are also thankful to all facility & Staff members of our department for corporation extended in completion of our project.

REFERENCES

[1] J. G. Pinto, “Bidirectional Battery Charger with Grid-to-Vehicle, Vehicle-to-Grid and Vehicle-to-Home Technologies,” IEEE, 2020.

[2] X. Zhou, S. Lukic, S. Bhattacharya, and A. Huang, “Design and Control of Grid-Connected Converter in Bidirectional Battery Charger for Plug-in Hybrid Electric Vehicle Application,” in Proc. IEEE Vehicle Power and Propulsion Conference (VPPC), 2019, p. 1716.

[3] B. R. V. Prasad, D. N. Satyavati, V. Satish Varma, and R. Hema Kumar, “Solar Charging Station for Electric Vehicles,” Int. J. Adv. Res. Sci. Commun. Technol., vol. 7, no. 2, pp. 316–325, 2021, doi: 10.48175/IJARSCT-1752.

[4] I.-M. Tabakis, M. Dasygenis, and M. Tsolak, “A Monitoring System for People Living with Alzheimer’s Disease,” in Proc. 2017 Panhellenic Conference on Electronics and Telecommunications (PACET), 2017.

[5] R. Das, K. Thirugnanam, P. Kumar, R. Lavudiya, and M. Singh, “Mathematical Modeling for Economic Evaluation of Electric Vehicle to Smart

Grid Interaction," IEEE Trans. Smart Grid, vol. 5, pp. 712–721, 2020, doi: 10.1109/TSG.2013.2275979.

[6] K. Kumar, K. V. V. S. R. Chowdary, P. Sanjeev Kumar, and R. Prasad, "Analysis of Solar PV Fed Dynamic Wireless Charging System for Electric Vehicles," in Proc. IECON, 2021.

[7] R. Kavin, D. Arvind, S. Dhanush, D. Ajay, and K. Karpaganathan, "Dynamic EV Charging by Wireless Power Transfer," 2022.

[8] M. A. Al Mamun, M. Istiak, and K. A. Al Mamun, "Design and Implementation of a Wireless Charging System for Electric Vehicles," 2020.

[9] P. Lopes, P. Costa, and S. Pinto, "Wireless Power."

[10] S. Bhattacharya and Y. K. Tan, "Design of Static Wireless Charging Coils for Integration into Electric Vehicle," in Proc. IEEE ICSET, Nepal, 2012, doi: 10.1109/ICSET.2012.6357389.

[11] X. Mou and H. Sun, "Wireless Power Transfer: Survey and Roadmap," in Proc. IEEE 81st Vehicular Technology Conference, Glasgow, U.K., 2015, doi: 10.1109/VTCSpring.2015.7146165.

[12] Supriyadi, E. Rakhman, Suyanto, A. Rahman, and N. C. Basjaruddin, "Development of a Wireless Power Transfer Circuit Based on Inductive Coupling," TELKOMNIKA, vol. 16, no. 3, Jun. 2018. Available: http://journal.uad.ac.id/index.php/TELKOMNIKA/about/contact.

[13] H. S. Das, M. M. Rahman, S. Li, and C. W. Tan, "Electric Vehicles Standards, Charging Infrastructure, and Impact on Grid Integration: A Technological Review," Department of Electrical and Computer Engineering, University of Alabama, Tuscaloosa, AL, USA.

[14] Y. J. Jang, "Survey of the Operation and System Study on Wireless Charging Electric Vehicle Systems," Department of Industrial and Systems Engineering.

[15] H. Ngo et al., "Optimal Positioning of Dynamic Wireless Charging Infrastructure in a Road Network for Battery Electric Vehicles," 2020.

[16] M. Adil et al., "A Reliable Sensor Network Infrastructure for Electric Vehicles to Enable Dynamic Wireless Charging Based on Machine Learning Technique," 2020.

[17] A. Smagulova et al., "Simulation Analysis of PI and Fuzzy Controller for Dynamic Wireless Charging of Electric Vehicle," 2020.

[18] P. S. Subudhi et al., "Wireless Power Transfer Topologies Used for Static and Dynamic Charging of EV Battery: A Review," 2020.