IOT Based Hydroponics System for Plant Growth and Pest Detection

Mrs.Poonam. A. Mali[1], Tanishka Sachin Laykar[2], Sahil Keshav Swami[3],
Madhura Nivas Patil[4], Anup Ragesh Koli[5], Fiza Satter Kazi[6]
[1,2,3,4,5]*D. Y. Patil College of Engineering & Technology, Kolhapur, Maharashtra, India*

***Abstract*— Hydroponics is a modern method of farming plants without soil and instead uses water and essential nutrients. By using IOT with hydroponics we can monitor the essential plant growth conditions such as pH, nutrients, temperature, humidity and light. Traditional hydroponics systems will often be manually monitored and may not detect any pests. This review looks into current hydroponics systems based on IOT and will look into techniques to monitor plant growth and detect pests using cameras/AI. Papers will be compared based on the sensors/controller, automation, IOT and parameters used. This review will highlight where current research lacks and will discuss challenges and opportunities to create a cost effective and intelligent hydroponics system.**

***Index Terms*— Hydroponics, Internet of Things (IoT), Smart Hydroponics, Plant Growth Monitoring, Pest Detection, Artificial Intelligence (AI), Computer Vision, Sensor Based Monitoring, Automation.**

I. INTRODUCTION:

Agriculture plays an important role in our lives but traditional farming can cause problems such as limited space, scarce water, climate change and pests. Hydroponics is a modern type of farming which uses water with essential nutrients to grow plants. This reduces water usage, increases growth rate and can be used in limited spaces. However, it requires manual monitoring to ensure the parameters such as nutrients, pH, water levels, temperature and pests are correct.

By creating an IOT Based Hydroponic System for Plant Growth and Pest Detection we can overcome these issues. This project will use a raspberry pi to monitor the essential plant growth parameters such as EC, pH and water level.

A camera module will be used to detect if there are any pests. The raspberry pi will process the data and automatically turn on/off the water/nutrient pumps. The data will be sent to a mobile application using IOT. This reduces manual labour, creates healthier plants, saves water/nutrients and improves efficiency.

II. PROBLEM STATEMENT AND OBJECTIVES:

Traditional agriculture can cause issues with limited space, incorrect water management and manual monitoring. Hydroponic farming requires the parameters to be correct such as pH, nutrients and temperature. This can take a long time and effort to ensure the plants and pests are being monitored. An affordable system using IOT automation to monitor plant growth and detect pests is required.

This project will use the Raspberry Pi 4 Model B to create an IoT-Based Hydroponics System. Sensors will be used to monitor pH, TDS and temperature. Pumps will be used to automatically manage the water and nutrients. A camera module will be used to monitor plant health and detect pests.

Project Objectives:

- Create an IoT Based Hydroponic system using the Raspberry Pi 4 Model B.
- Use sensors to monitor pH, TDS and temperature.
- Use pumps to automatically manage the water flow and nutrients.
- Use a camera module to monitor plant health and detect pests.
- Monitor in real time using IOT and send alerts.
- Evaluate the system to ensure resources are managed efficiently and plants are healthy.

III. LITERATURE REVIEW AND RESEARCH GAPS

Many researchers have looked into using a variety of methods to improve hydroponics farming. Using a system with IOT, sensors, automation and image processing to monitor plant growth, manage nutrients, pH and detect plant disease/pests. However many have issues with manual monitoring, automation, cost and not detecting pests in real time. An integrated IOT system is required to monitor plant growth, reduce manual monitoring and manage water and nutrients.

I. Smart Hydroponics System Using Raspberry Pi (2022)

This project uses a Raspberry Pi to monitor environmental conditions such as temperature, humidity and water level. This uses sensors and pumps for automation. No parameters are used to detect pests using a camera. A camera is connected to a laptop to capture plant images using Python.

II. IoT Based Hydroponic Farming System (2023)

This project uses an IoT Based Hydroponics system to monitor plant growth parameters using sensors. It can be easily monitored using computers/mobiles. No pest detection using a camera. This issue would be solved by using sensors and camera connected to a laptop to monitor plant health.

III. Raspberry Pi Based Plant Monitoring System (2024)

This project uses a Raspberry Pi with sensors and camera to monitor environmental conditions. This allows sensors and plants to be monitored. No automation of water and nutrients and no pest detection. This would be solved using automatic pumps and camera to detect pests using Python.

IV. IoT Based Control and Monitoring System for Hydroponic Plant Growth Using Image Processing and Mobile Applications (2025)

This project uses a Raspberry Pi with sensors, ESP32 controller, image processing and mobile application to monitor plant health. It uses a CNN model to determine if leaves are healthy or not. This project focuses on plant health. This project uses a Raspberry Pi 4 Model B to automatically manage hydroponics and a separate camera connected to a laptop to detect pests using Python.

V. Temperature, Humidity and Water Level Monitoring System for Hydroponic Plants Using IoT Based Raspberry Pi (2023)

This project uses an IoT based Raspberry Pi to monitor temperature, humidity and water level. Sensors can be used to monitor data and this can be monitored remotely. This allows users to monitor the environment and ensures water level is adequate. However this project only focuses on monitoring. This issue would be solved by adding pH and TDS monitoring, automatic pumps and a separate pest monitoring system using a laptop.

IV. PROPOSED SYSTEM DESIGN

This project aims to create an IOT Based Hydroponics System for Plant Growth and Pest Monitoring. This will monitor and control the essential parameters to ensure plants are growing healthily. A Raspberry Pi will act as the main controller to collect data from the EC sensor, PH sensor, water level sensor, temperature sensor and camera module.

The camera module will monitor the plants and detect if any pests are present. The data from the sensors will automatically turn on/off the water pump and nutrient pump. The data collected from the sensors will be sent to the cloud using IOT. This means the system can be monitored using a mobile application. If there are any issues with water level, improved PH/EC, increase in temperature or pest detection then the system will automatically send a notification.This will reduce manual effort, save water, improve plant health and increase efficiency.

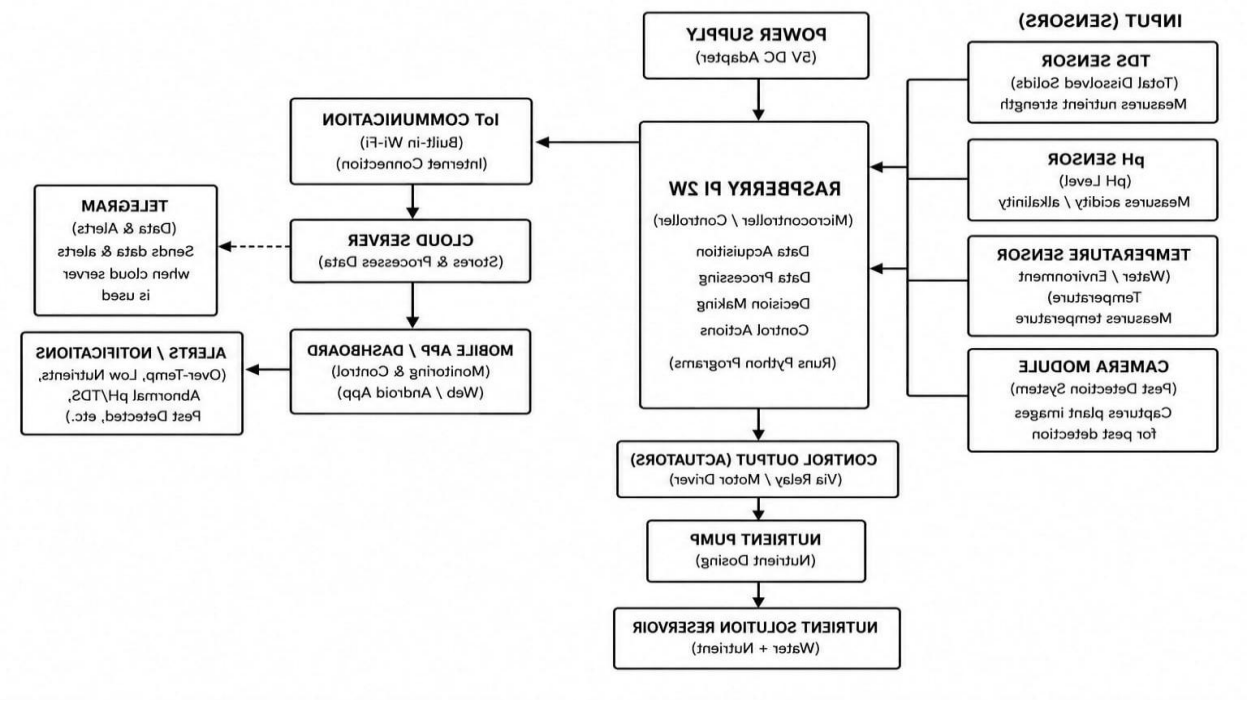

Block Diagram of IOT Based Hydroponics System for Plant Growth and Pest Monitoring

As shown in figure 2 there are connections for the proposed IOT Based Hydroponics system. The pH and TDS sensors will be connected to the ADS1115 ADC. This will convert the analogue signals to digital data. This will then connect to the Raspberry Pi using I2C (SDA/SCL). The DHT11 sensor will connect to a GPIO pin on the Raspberry Pi. All the sensors will be powered by a 5V power supply. The isolated relay module will be powered by a 12V DC power supply. The Raspberry Pi will control the relay module which will power the water and nutrients pumps. The pumps will be powered by the relays using the AC power. A USB Camera will be used to capture plant images for pest detection using image processing using Python on a laptop.

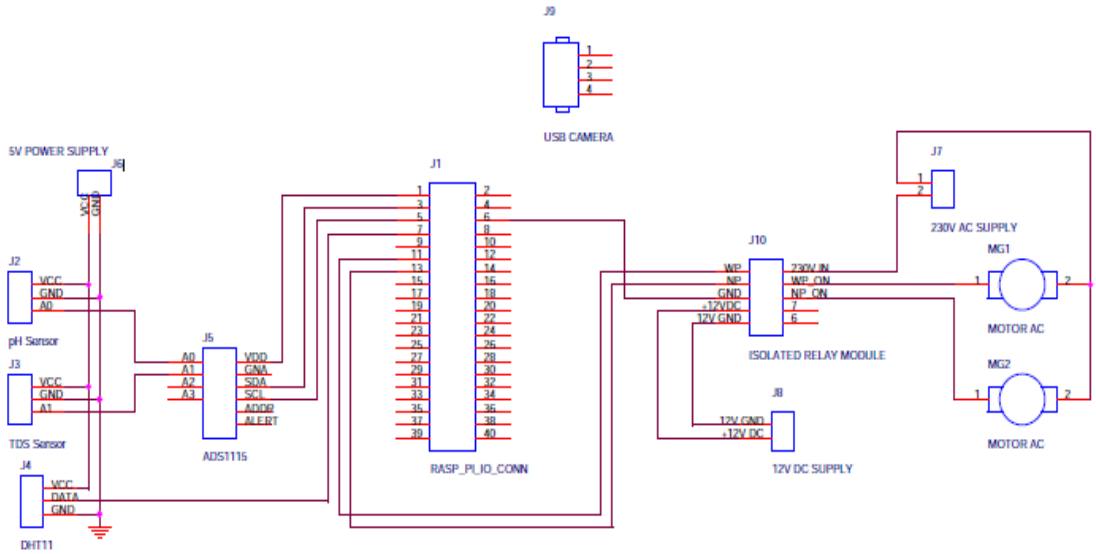

Figure 2 Circuit Connections for Proposed Hydroponic System.

V. MAIN COMPONENTS AND ROLES

Sr. No.	Component	Proposed Role
1	Raspberry Pi 4 Model B	Controls the system and processes sensor data.
2	pH Sensor	Measures the pH level of the nutrient solution.
3	TDS Sensor	Measures the total dissolved solids in the nutrient solution.
4	Temperature Sensor	Measures the temperature of the hydroponic system.
5	ADS1115 ADC Module	Converts analog sensor signals into digital data.
6	USB Camera Module	Captures plant images for pest monitoring.
7	Relay Module	Controls the operation of water and nutrient pumps.
8	Water Pumps	Circulate water and supply nutrients to plants.
9	Power Supply	Provides the required power to system components.
10	Laptop	Processes plant images using Python for pest monitoring.

IV. PROPOSED METHODOLOGY

This project will aim to create an IoT Based Hydroponics System for Plant Growth and Pest Monitoring. The Raspberry Pi 4 Model B will be used to monitor the hydroponics parameters and control the pumps. A camera will be used to capture images of plants to detect pests. This will be done using the following methodology;

Hydroponic Structure:

A vertical structure will be created using 3 PVC pipes. Each pipe will have 5 holes for plants to fit in. This will help grow multiple plants in a limited space and make water/nutrients more efficient.

Sensors Installed:

A total of 3 sensors will be used to monitor the hydroponics and environmental conditions.

pH Sensor – Measures acidity/alkalinity of nutrients.

TDS Sensor – Measures total dissolved solids of nutrients to give an indication of concentration.

DHT11 Temperature Sensor – Measures temperature.

Sensors Connected to Raspberry Pi:

The Raspberry Pi 4 Model B will be the main controller. The pH and TDS sensors will provide analogue data so an ADC will be used. The DHT11 will provide digital data and will connect to the correct GPIO pin.

Collect Data:

The Raspberry Pi will collect data from the pH, TDS and temperature sensors. This data will be processed and compared to set parameters depending on the plant type. This will show if there are any changes in the nutrients and temperature.

Automated Water and Nutrients:

The Raspberry Pi will control the water and nutrients pumps using a relay module/motor driver based on the data collected from the sensors. This will ensure the water and nutrients are managed based on requirements. This will reduce wastage.

Monitor Plant Growth:

The plants can be monitored to see how they are growing. Data can be recorded from the sensors to see if there are any changes in the growing conditions. This will help determine if the plants are receiving the right conditions.

Pest Detection Using Camera:

A separate camera will be used to detect pests. This can be directly connected to a laptop. Images of the plants can be captured and processed using Python. The program will look for any visible signs of pests. The images will be analysed using the selected image processing/machine learning technique and displayed on the laptop. This means the pest detection will be separate to the Raspberry Pi Hydroponics system.

Test System:

The hydroponics monitoring and automation system can be tested by checking the data from the sensors, pumps and controller. The pest detection program can

be tested using plant images. Results can then be analysed.

Overall System:
This project will consist of 2 main sub systems;
Hydroponics Monitoring and Automation – Raspberry Pi 4 Model B, pH Sensor, TDS Sensor, DHT11 Temperature Sensor, ADC, Pumps, Relay Module.
Monitoring – Camera connected to laptop and Python program.

VII. TINY ML MODEL:

Plant Image Processing and Pest Detection
A camera will be used to monitor plant health and detect any potential pests. Images of the plant can be captured using a USB Camera and sent to a laptop. Image processing techniques can be used to analyse the colour of the leaves and any visible damage.

Capturing Images
Images of the plants can be captured either on a timed basis or manually. The images can be processed using Python. This will allow the leaves of the plants to be monitored and any visible signs of pests.

Analysing Images
The images can be analysed based on the colour of the leaves, spots, holes and damage. This will identify plants that look healthy and plants showing signs of pests. This image processing will be separate to monitoring from the sensors.

Model 2: Sensor Based Monitoring
The numerical data from the pH, TDS and temperature sensors can be used to monitor the hydroponics system. The data will be collected and processed by the Raspberry Pi 4 Model B. This will allow us to determine the condition of the nutrients and growing environment. The pH sensor will determine the acidity/alkalinity of the nutrients. The TDS sensor will determine how much nutrients are dissolved in the water. The temperature sensor will monitor any changes. Based on the data collected the system can support managing the water and nutrients using automated pumps. The data can be sent using IOT to monitor remotely. Telegram notifications can be sent.

Labelling Data
Data will be collected using the hydroponics prototype. For each observation the pH, TDS, temperature, plant name, date and plant condition can be recorded. Images of the plants can be captured using the USB camera and processed on the laptop using Python. The data can be sorted into CSV files. The plant images can be labelled based on their visible conditions. Different samples can be tested.

Results
The IoT Based Hydroponics System will use a Raspberry Pi 4 Model B to monitor the essential growing parameters using the pH, TDS and temperature sensors. This will allow us to monitor the condition of the nutrients and growing
The camera will capture images of the plants. These can be processed using Python on the laptop. This will allow us to monitor plant health and any potential pests. Using sensor monitoring and image processing will help manage the hydroponics system.

Current Status
The initial stage of the system will be to integrate the sensors and monitor the growing parameters. The images will be processed using a camera. More testing is required using different plant images to see how well pests can be identified.

Hardware
Prototype will consist of Raspberry Pi 4 Model B connected to the pH, TDS and temperature sensors. Automated pumps will be controlled using a relay module. A USB Camera will be connected to a laptop.

VIII. DISCUSSION

The IoT Based Hydroponics System will use sensor-based monitoring, automated water and nutrients and pest detection using a camera. The pH, TDS and temperature sensors will be connected to the Raspberry Pi 4 Model B to monitor the nutrients and growing environment. This will allow us to determine the conditions for plant growth. Automated pumps will help circulate the water and provide nutrients.
A USB Camera will be used to capture images of the plants. These can be processed on the laptop using Python. This will allow us to identify visible signs of pests and unhealthy plants. IOT can be used to monitor

remotely and send Telegram notifications. This aims to reduce manual monitoring, improve resource management and early detection of plant issues. More experimentation will be required to determine how well the system works.

IX. LIMITATIONS AND SAFETY

There are some limitations with this hydroponics system. The data from the sensors can be affected by changes in the environment and how well the sensors work. The pest detection using a camera can be affected by image quality, lighting and visible symptoms. The image processing using Python may not accurately detect all pests.

The system will need to be constantly powered and have internet access to monitor remotely and send Telegram notifications. Proper insulation and waterproofing will be required to avoid any damage. Care will need to be taken when fitting the pumps, sensors and wiring. Regular checks will need to be carried out to ensure water quality, nutrients and plant conditions.

X. CONCLUSION:

This IoT-Based Hydroponics System monitors plant growth and identifies potential pest problems. The Raspberry Pi 4 Model B collects information from the pH, TDS and temperature sensors. Pumps are used to automate the flow of water and nutrients.

A USB camera is also used to take pictures of the plant and analysed using Python on a laptop to identify any visual signs of pests attacking the plant and if it is unhealthy. Using IoT allows the system to be monitored remotely and alert the user via Telegram.

Overall, this system reduces the amount of work required manually, improves the water and nutrient control and ensures healthy plant growth. Further testing can be done to improve the systems performance.

REFERENCES

[1] N. Yang *et al*., “An integrated platform and method for rapid high-throughput quantitative...” [Incomplete reference: publication details and complete title required.]

[2] D. J. A. Rustia *et al*., “Automatic greenhouse insect pest detection and recognition based on a cascaded deep learning classification method,” *Journal of Applied Entomology*, 2021, doi: 10.1111/jen.12834.

[3] M. Preti, F. Verheggen, and S. Angeli, “Insect pest monitoring using camera-equipped traps: Potentials and limits,” *Journal of Pest Science*, 2021. [Online]. Available: https://link.springer.com/article/10.1007/s10340-020-01309-4

[4] F. M. Talaat *et al*., “IoT integrated robotic system for automated detection of plant diseases and environmental monitoring,” *Scientific Reports*, 2026, doi: 10.1038/s41598-025-32624-4.

[5] R. Arunachalam *et al*., “An efficient feature pyramid network with an adaptive LSTM for pest detection and classification in IoT,” *Scientific Reports*, 2026, doi: 10.1038/s41598-025-34409-1.