AI-Based Solar Power Predication with Integrated Cleaning & Tracking Mechanisms Via SOLVYN Platform

Mrs. K. V. Thorushe[1], Mahesh Suresh Somawar[2], Pruthviraj Deelip Patil[3], Ayush Suresh Jadhav[4], Maithili Deelip Shevale[5]
[1,2,3,4,5]*D. Y. Patil College of Engineering and Technology, Kolhapur*

***Abstract*—Solar photovoltaic (PV) systems are a reliable source of clean energy, though their operation is subject to various parameters such as solar irradiance, temperature, humidity, panel tilt, and dirt levels. This paper proposes an AI-powered smart solar power system with short-term prediction, dual-axis tracking, auto-cleaning, and IoT monitoring functionalities. The developed prototype utilizes a 20 W solar panel, Raspberry Pi 4, INA219 voltage and current sensor, DHT22 temperature and humidity sensor, and four Light Dependent Resistors (LDR). The machine learning (ML) model was trained using a Random Forest Regressor to establish a correlation between the measured parameters and the produced direct current (DC) power in Watts. The proposed system tracks the sun's position using a dual-axis mechanism and adjusts the panel orientation using DC motors for optimal solar exposure. In addition, the cleaning process was automated using a relay-controlled water pump, while the IoT module was implemented using Flask and ThingSpeak/MQTT libraries to visualize the system's data in real-time. The results demonstrate that the proposed prediction model achieved an average root mean squared error (RMSE) of 2.45 W and an R2 of 0.95. Furthermore, the prototype was able to achieve 40% more energy on a daily basis than the conventional fixed solar panel. Overall, the developed smart solar power system illustrates the potential of utilizing an embedded system with AI, auto-cleaning, and IoT technologies to create an efficient and intelligent PV energy harvester.**

***Index Terms*—Solar photovoltaic; artificial intelligence; Random Forest; Solar power prediction; Dual-axis tracking; Automatic cleaning; Raspberry Pi; IoT Monitoring.**

I. INTRODUCTION

The expanding use of renewable energy technologies has led to a remarkable increase in their significance in solar photovoltaic (PV) generation. In the technology of renewable energy, photovoltaics contributes greatly to the process of transforming sunlight into electricity, both at a small level as a private household operation and at a large one as a utility application. Unlike traditional kinds of generation, which cause dispatchable generation, it must be noted that the generation of modern photovoltaics suffers from different environmental and operational conditions. Environmental conditions cause variability in irradiance, climate, cloud cover, panel setup, and orientation, besides the process of soiling. Hence, this means that prediction and control processes are crucial for the process of making photovoltaic generation reliable, efficient, and practical. Systematic investigation of photovoltaic forecasting has shifted to machine learning. [1], [2].

The importance of photovoltaic forecasting lies in its ability to support energy management decisions using anticipated generation. Intelligent energy management requires knowledge of power production in order to schedule, monitor, store, and consume electrical energy. Common forecasting approaches are based on either physical modeling or statistical relationships, while data-driven approaches learn patterns from measured examples. Recently, a variety of machine-learning methods have been applied to the task of photovoltaic forecasting, including Random Forest (RF), gradient-boosting techniques such as XGBoost, artificial recurrent neural networks, long short-term memory (LSTM) networks, and transformer-based models. A recent article in Energy and AI demonstrated the value of machine-learning methods for photovoltaic forecasting and showed that a Transformer-based framework could yield low error

during forecasting when the appropriate meteorological and PV-system inputs are included [1]. A 2024 review article on hybrid photovoltaic estimation and forecasting approaches concluded that the combination of data-driven learning and physical modeling can lead to better generalization and avoid unphysical predictions [2]. These advancements confirm that artificial intelligence (AI) is becoming an enabler for photovoltaic forecasting applications that extract value from raw environmental measurements.
In addition to forecasting, the physical orientation of a photovoltaic module is directly related to the incident solar radiation. A fixed solar panel cannot follow the apparent movement of the sun in the sky, as the local time dictates a changing solar zenith angle. Solar tracking systems allow a photovoltaic module to adjust its orientation in order to follow the sun's apparent motion. Tracking can be performed using single- or dual-axis mechanisms, with the latter providing two degrees of freedom and greater flexibility in tracking the sun's position. Reviews on solar tracking have shown that it can yield higher energy production compared to a fixed photovoltaic module while acknowledging that the control precision, power consumption, mechanical complexity, environment, and economic factors all impact the performance of tracking [3], [4]. Solar tracking using sensors remains appealing for laboratory and small-scale prototypes due to the simplicity with which light sensors can supply directional feedback to adjust the orientation of the panel.

A major contributor to reduced performance of photovoltaic modules outdoors is surface soiling. Particulate matter accumulates on the surface of a photovoltaic module, reducing the amount of incident solar radiation that reaches the photovoltaic cells and impacting the thermal and electrical response of the module. The magnitude of the power loss depends on the amount and nature of the deposited material, the local environment, humidity, wind, surface properties, and module orientation. A comprehensive survey in solar energy identified dust as an important contributor to the optical, thermal, and electrical performance of photovoltaic modules and examined a wide range of cleaning and monitoring technologies [5]. Likewise, a 2024 review article in Energy Reports concluded that soiling can cause significant losses in some operating environments and emphasized the need to consider the local dust characteristics, climate, water availability, and system economics when selecting an appropriate cleaning method [6]. These insights indicate that maintaining the cleanliness of photovoltaic modules should be considered an integral aspect of operations rather than a routine manual procedure.

The cleaning of photovoltaic modules typically involves manual procedures that are neither optimal nor consistent with the operation of the system. Over-cleaning increases the operating cost and resource consumption, whereas under-cleaning allows soiling losses to accumulate. Intelligent cleaning technologies have been investigated recently, including mechanical brushes, wipers, and robots, as well as anti-soiling coatings, electrostatic cleaning, and other water-reduction approaches [5], [6]. The choice of an appropriate cleaning mechanism is particularly important for small autonomous photovoltaic systems since the energy and water consumed by the cleaning process can offset the gains in photovoltaic performance. An intelligent solar platform should recognize the need for cleaning operations and activate the selected mechanism when appropriate.
lthough solar forecasting, tracking, cleaning, and remote monitoring have been investigated in detail, these capabilities are commonly implemented in separate subsystems. Integration provides an opportunity to develop a cyber-physical system in which sensing, prediction, actuation, maintenance, and monitoring are combined. An integrated system can use the real-time measurements to not only anticipate the photovoltaic power but also to make decisions related to panel orientation, cleaning, and overall status. This is particularly important in embedded applications where hardware constraints demand close coordination between sensing, processing, control, and communication.
The present project is concerned with an AI-based solar power prediction system with cleaning and tracking mechanisms. The proposed prototype makes use of a 20 W solar panel and a Raspberry Pi 4 Model B as the processing and control unit. Electrical measurements are acquired using an INA219 voltage and current sensor, while a DHT22 sensor measures the ambient temperature and humidity. Four LDR sensors determine the relative light intensity and provide feedback for the dual-axis solar tracking. DC motors are used to rotate the panel while a relay-

controlled water pump is used to perform automatic cleaning when the cleaning condition is met. The software environment includes Python, NumPy, Pandas, Scikit-learn, Flask, ThingSpeak/MQTT, and Random Forest regression for solar power prediction [7]. Overall, the integrated system combines environmental, electrical, and machine-learning insights with mechanical actuators, self-maintenance, and IoT visualization into one application.

The key idea in the proposed system is the transformation of the sensor observations into predictive information and physical manipulation. Environmental and electrical data are first acquired and processed by the Raspberry Pi.

The voltage and current measurements are used to calculate the electrical power using

[P = V times |]

where (P) is the instantaneous power, (V) is the voltage measurement, and (I) is the current measurement. These data are then provided to the Random Forest model to obtain a short-term power prediction. At the same time, the LDR feedback is used to adjust the orientation of the dual-axis tracker in order to balance the directional light intensity and point the panel toward the most illuminated area. When the cleaning condition is detected, the relay activates the water pump to remove the deposited dust. The measured values, predicted power, and system status can then be uploaded to the IoT interface for observation and analysis [7].

The project thus addresses three complementary aspects of photovoltaic system performance: prediction, energy harvesting, and maintenance. Forecasting provides insight on the expected generation, while the dual-axis tracking attempts to increase the solar incidence, and the automatic cleaning mechanism mitigates the losses due to soiling. The IoT aspect provides an operational layer in which the user can observe and control the status of the system. This represents the current trend in photovoltaic research toward intelligent, autonomous, and data-driven applications [1]-[6].

According to the supplied project documentation, the prototype evaluation reports a 40% higher daily energy generation compared to the fixed-panel configuration, a Random Forest prediction RMSE of approximately 2.45 W, and (R^2) of about 0.95 [7], [8]. These values are project-reported results and must be reproduced from the final experimental dataset with the sampling interval, test duration, environmental conditions, train-test methodology, and uncertainty clearly stated before being submitted for formal publication. The principal contribution of the work is not only the use of AI, tracking, cleaning, and IoT technologies in isolation but also their integration into a compact embedded solar-energy platform that can become a foundation for intelligent photovoltaic monitoring and control.

II. LITERATURE REVIEW

2.1. AI-Based Solar Power Forecasting

Photovoltaic power prediction has garnered increasing interest in research due to the unpredictable characteristics of PV generation and its reliance on environmental elements. Solar irradiance, temperature, humidity, cloud cover, and past generation of PV can induce unusual non-linear consequences on the power curve produced. As such, accurate forecasting is critical to energy management, demand scheduling, storage control, and grid integration. Recent works have shown increasing application of machine learning and deep learning algorithms to the problem of non-linear regression in PV generation. Random Forest, support vector machines, gradient boosting, recurrent neural networks, Long Short-Term Memory (LSTM) networks, and Transformers have been investigated for short-term, medium-term, and long-term forecasting applications [1]– [4].

Random Forest, in particular, is a compelling algorithm for embedded and low-scale PV applications due to its ability to model non-linear patterns with a relatively simple underlying architecture, as compared to deep learning networks. Literature reviews investigating the application of machine learning to PV forecasting indicate that Random Forest can perform as well as or better than alternative approaches given sufficient training data and feature engineering. For instance, one work cited the Random Forest as one of the most successful algorithms in a comparative study of hourly PV forecasting at a regional level, particularly when trained on lagged meteorological and power features [1]. Another study showed the potential of the Random Forest approach in a multi-algorithm comparison of forecasting performance [2].

The body of work also suggests an emerging trend towards more complex time-series modeling techniques. With their ability to capture sequential patterns in data, Long Short-Term Memory (LSTM) networks lend themselves well to the analysis of photovoltaic time series. More recently, Transformer-based architectures have been investigated in the field of photovoltaic forecasting as a means of capturing long-range dependencies. One work published in 2024 cites the application of a Transformer-based deep learning architecture to the problem of photovoltaic forecasting [3]. At the same time, however, more complex algorithms generally require larger training datasets, greater computational resources, hyperparameter tuning, and careful deployment strategies. For a Raspberry Pi–based academic application, a simpler ensemble method such as Random Forest can provide compelling results with reduced overhead.

The present work, therefore, aims to leverage the potential of the Random Forest algorithm in the context of a Raspberry Pi application. Rather than analyzing Random Forest as a standalone software experiment, this project envisions the application of the algorithm as part of a working software suite. The proposed Solar Intelligence Overview (SOLVYN) concept represents a potential application of the Random Forest algorithm in the field of solar power forecasting. The method makes the AI/ML experiment from a self-sufficient script or notebook into a usable application that has real-world implications for practical use. Instead of a proof-of-concept application that examines a single PV inverter, this tool aims to interconnect the monitoring system and to collect data from the sensors, use the results of mathematical analysis and machine learning, and communicate it in an understandable way.

2.2. Solar Tracking Systems

The orientation of a photovoltaic panel influences the amount of solar radiation that reaches the panel. Fixed PV modules cannot keep their orientation optimal for the entire day, as the apparent position of the sun changes during the day. Solar tracking systems tackle this problem by mechanically adjusting the orientation of the module. Generally, solar tracking systems are classified according to their degree of freedom of rotation and are commonly known as single-axis and dual-axis solar tracking systems, with the latter allowing two degrees of angular movement. Recent reviews suggest that dual-axis trackers can produce an appreciable amount of energy improvement as compared to stationary (non-tracking) systems, although the actual value of the improvement depends on the geographical location, environmental conditions, the accuracy of the tracker, mechanical design, and the energy consumption of the actuators [5], [6].

Kazem et al. have performed a comprehensive survey of photovoltaic tracking technologies, noting an increasing trend of adopting intelligent sensors, artificial intelligence, and novel control methodologies in modern tracking systems [5]. Likewise, Kuttybay et al. have presented a review paper on the different approaches for tracking and report that the performance of a tracker varies significantly depending on the tracking method, geographical setting, sensory technology, and control methodology [6].

Note that such advances in the field of solar tracking can potentially improve the performance of a PV system, but the extra mechanical and electrical complexity has to be weighed against such benefits.

A sensor-based approach offers a viable solution for small-scale implementations. Light-dependent resistors can be placed around the PV module and used to detect a difference in the degree of illumination. The controller then drives motors until the difference in illumination is minimized.

The project utilizes a set of four LDR sensors to track the sun's apparent motion and employs DC motors for the degrees of freedom a dual-axis tracking system requires [7]. This approach is ideal for the prototype, as it allows mechanical and electrical interaction between the environment and the system.

The software component of SOLVYN should not be regarded merely as an auxiliary process for controlling the tracker motors. Instead, the software can observe and control the tracker's operation, log the LDR and motors' behavior, recognize if the tracker is operating correctly, and relate the two variables: the tracker's activity and the PV's power production. It would be possible to evaluate whether the extra power produced by the tracker is worth the expenditure of energy spent on actuators.

2.3. Photovoltaic Soiling and Automatic Cleaning

Soiling represents yet another challenge impacting the performance of photovoltaic systems. Particles of dust, dirt, pollen, sand, and other substances adhering to the surface of a module decrement the amount of incident radiation and, therefore, the electrical production of the system. The effect of soiling depends on various factors, such as the type of particles, humidity, wind, tilt of the module, and other environmental factors. A thorough survey by Wan et al. describes the dust-soiling mechanism and the different techniques of soiling detection and mitigation [7]. Recent studies note the importance of selecting an optimal cleaning method depending on the specific set of environmental conditions [8], [9].

Dust removal from photovoltaic modules is traditionally accomplished using manual approaches such as wiping and brushing or utilizing water resources to wash the module's surface. While such methods are effective, they require sufficient amounts of time and effort to execute, making them unsuitable for regular cleaning of distributed photovoltaic systems. As a result, researchers have explored various automated and robotic approaches to cleaning photovoltaic modules as well as non-mechanical methods such as applying anti-soiling coatings and employing electrostatic and air-based dust removal techniques [8], [9].

A growing number of research papers explore concepts of autonomous maintenance and artificial intelligence in the domain of photovoltaic soiling management. Kishor et al. describe an autonomous robotic system featuring artificial intelligence that supports real-time observation and analysis as well as intelligent cleaning of photovoltaic modules [10]. The project's scope suggests that this line of research is particularly compelling, as it proposes a conceptual shift from the maintenance paradigm (cleaning as a regular operation) to a novel paradigm (condition-based cleaning).

The project foresees the use of an automatic cleaning mechanism featuring a relay-operated water pump triggered by a particular set of circumstances [7]. The implementation inside the SOLVYN application can be designed in such a way as to allow observing and recording the effects of cleaning: system behavior before and after the cleaning, the system's reaction, and the changes in the PV production.

2.4. IoT-Based Photovoltaic Monitoring

The Internet of Things has allowed photovoltaic systems to evolve from standalone devices into remotely accessible and interconnected elements of a greater whole. IoT-based photovoltaic monitoring architectures usually integrate electrical sensors, environmental sensors, embedded control units, communication technologies, databases, and web interfaces, allowing voltage, current, power, environmental readings, alarms, and operating conditions to be recorded constantly.

Recent works have shown the viability of IoT-centered SCADA architectures for photovoltaic applications. An open-source IoT architecture published in 2024 included multiple electrical sensors, MQTT communication, and embedded processing to enable real-time monitoring and remote control of a photovoltaic system [11]. Another work published in 2024 presented an IoT-based monitoring and control architecture that employed HTTP and TCP/IP communication for photovoltaic applications [12]. The combination of Raspberry Pi and IoT principles has also been explored in several recent works that highlight the potential of embedded computing platforms to support data acquisition, storage, processing, and visualization in photovoltaic systems [13].

While these works emphasize the value of real-time remote access, it is evident that photovoltaic monitoring is not limited to observation and recording aspects. It is common for a dashboard to collect and display metrics without taking any specific actions. In contrast, the proposed architecture of SOLVYN intends to integrate data acquisition, AI processing, system control, and monitoring into a single software application.

2.5. AI-Integrated Supervisory Software for PV Systems

An evident trend in recent research on energy systems is the shift from generic monitoring applications to supervisory architectures that feature prediction, sensing, decision-making, fault detection, control, and visualization functions. Integrating such functions is especially compelling in the context of small-scale edge-computing platforms, where certain aspects of centralized cloud computing and networking can be substituted with local processing and control. This architectural philosophy has been explored in several

works on edge-IoT platforms for photovoltaic power systems. One such work described a Raspberry Pi-based SCADA system that featured MQTT communication, local processing, database, visualization, and an adaptive control algorithm for photovoltaic systems [14].

This article introduces SOLVYN (Solar Intelligence Overview), a concept for a software application that would serve as the central supervisory application for an entire solar power system. As suggested by the name, the application is intended to provide an overview of the status of the solar installation, including the performance of the photovoltaic panel, the energy generated, and the operational state of the tracking system and robot. It is important to note that such an application would involve several lower-level components: processing the input data from sensors, analyzing the electrical and environmental information, implementing the artificial intelligence function for photovoltaic predictions and recommendations, visualizing the status and forecasts, and providing access to control functions for cleaning and tracking adjustment. In essence, the application connects the physical side of the solar system with its artificial intelligence layer and provides an interface for the operator to access and review information pertaining to the system.

As noted earlier, an application that includes sensing, control, and monitoring can eliminate the need for separate modules that perform similar functions. To clarify the intended application architecture in the context of a single software application, it is useful to consider a hypothetical flow of relevant data and instructions.
Sensing → Data Processing → AI Prediction → Analysis/Decision → Tracking/Cleaning Control → Power Measurement → SOLVYN Monitoring → Historical Analysis

With these functions in place, the software application can include a closed-loop control system that compares the expected and actual performance of the photovoltaic system. With such a system in place, future improvements and additions, such as anomaly detection, predictive maintenance, maintenance planning, cleaning optimization, and tracking optimization, could be considered.

III. PROPOSED SOLVYN-BASED SYSTEM

A. System Overview

The proposed system is expected to be an integrated smart solar-energy system that includes solar power prediction, solar tracking, automatic cleaning, system monitoring and analysis. The main software application to be developed for the purpose of this project is SOLVYN (Solar Intelligence Overview). SOLVYN serves as the intelligence layer of the system and connects the hardware side of the solar panel with the artificial-intelligence model and user monitoring and analysis tools.

The system is equipped with a Raspberry Pi 4 unit as the computing and control core. The Raspberry Pi unit collects the information from the system sensors, which include voltage, current, temperature, humidity, and light intensity. This information is used as input to the integrated AI model for the purpose of solar power prediction. The sensor information is also used as control signals for the panel tracking and cleaning mechanism.

The project hardware and software components are determined according to the supplied project documentation.
Sensor Data → Data Processing → AI Prediction → System Analysis → Tracking/Cleaning Control → Power Measurement → SOLVYN Monitoring
SOLVYN thus provides an integrated environment for the purpose of prediction, monitoring, control, and analysis. Rather than using separate applications, the integrated approach is selected for the purpose of simplicity and smartness. The general working principle can be summarized as follows:

B. SOLVYN Software Application

SOLVYN is intended to be the supervising software application of the system. It is designed to collect the relevant information from the solar-energy system and provide predictions and useful output.
The application is expected to perform four main functions:

1. Data Monitoring:
SOLVYN collects electrical and environmental measurements, including voltage, current, temperature, humidity, and light.

2. AI-Based Prediction:
The collected data is provided to the integrated AI model. The project is focused on a machine-learning model that is used to predict output power. The application documentation indicates that a Random Forest regression model has been selected to estimate the solar power. According to the project methodology, the data collection, preprocessing, Random Forest training and prediction have been selected as consecutive stages.

3. System Control:
SOLVYN supervises the operations of the tracking and cleaning mechanisms. The LDR measurements are used to determine the angular position of the panel, whereas the cleaning mechanism can be actuated when the cleaning condition is triggered.

4. Analysis and Visualization:
SOLVYN displays the measured power, predicted power, sensor information, and system status. Furthermore, the historical data can be used to compare the measured and predicted values.

C. AI Prediction Module
The AI prediction module is one of the core components of the application. The objective of the module is to determine the amount of power that will be generated by the panel according to the current environmental conditions. The vector of input variables consists of the measurements collected by the system sensors.
The prediction process involves three main stages: training, prediction, and evaluation. First, the historical data is used to train the Random Forest regression model. Next, the model is used to make predictions about the solar power according to the most recent sensor data.

The measured value of electrical power is calculated as follows:
P = V times |
where (P) stands for power, (V) stands for voltage, and (I) stands for current.

The predicted and measured values can be compared with one another using evaluation metrics, including Mean Absolute Error (MAE), Root Mean Square Error (RMSE), and coefficient of determination ((R^2)). In this way, it is possible to determine how good the model is at making predictions.

D. Solar Tracking and Cleaning Control
The system also includes solar tracking and cleaning control mechanisms. Four Light Dependent Resistor (LDR) sensors are placed in such a way that they are able to detect variations in the incident light. If the difference in illumination intensity is detected, the DC motors are turned on to adjust the position of the panel accordingly. This way, a two-axis tracking mechanism is implemented for the prototype.
The cleaning mechanism is designed to prevent the panel surface from being covered with dust. The cleaning process is triggered when the defined condition for the cleaning mechanism is satisfied. The cleaning condition is defined as a certain level of dust on the panel surface. When the cleaning condition is satisfied, the Raspberry Pi activates the relay that triggers the water pump. The cleaning mechanism ensures that the panel surface remains clean, thereby eliminating potential losses in performance.

E. Monitoring and Analysis
A key advantage of the proposed solution is that the process of prediction and the physical process of solar tracking and cleaning can be monitored in real time. The application provides monitoring and visualization tools that allow for reviewing the current status of the monitoring system, AI predictions, and actuator states. The monitoring and analysis tools are implemented using Flask and ThingSpeak/MQTT.
In this way, the monitoring tools can display the voltage, current, and solar power (both measured and predicted), tracking status, cleaning status, environmental conditions (temperature, humidity), and connection status with the cloud.
In addition, the history of measurements can be used to compare and analyze the performance of the system. For instance, the measured and predicted power can be compared. The same applies to the comparison of tracking and non-tracking statuses and cleaning status and panel performance before and after cleaning.

F. Main Advantage of the Proposed Approach
The key advantage of the proposed approach is that several functions related to solar tracking and cleaning have been integrated. While conventional monitoring applications provide data visualization tools, the

application proposed in this project is focused on monitoring, prediction, analysis, and control.

By integrating these functions, the project can be viewed as a prototype for advanced integrated solar-energy management. Thus, the application provides the basis for implementing additional functions related to maintenance, cleaning, tracking, and power prediction and analysis.

IV. PROPOSED SYSTEM CIRCUIT DIAGRAM EXPLANATION

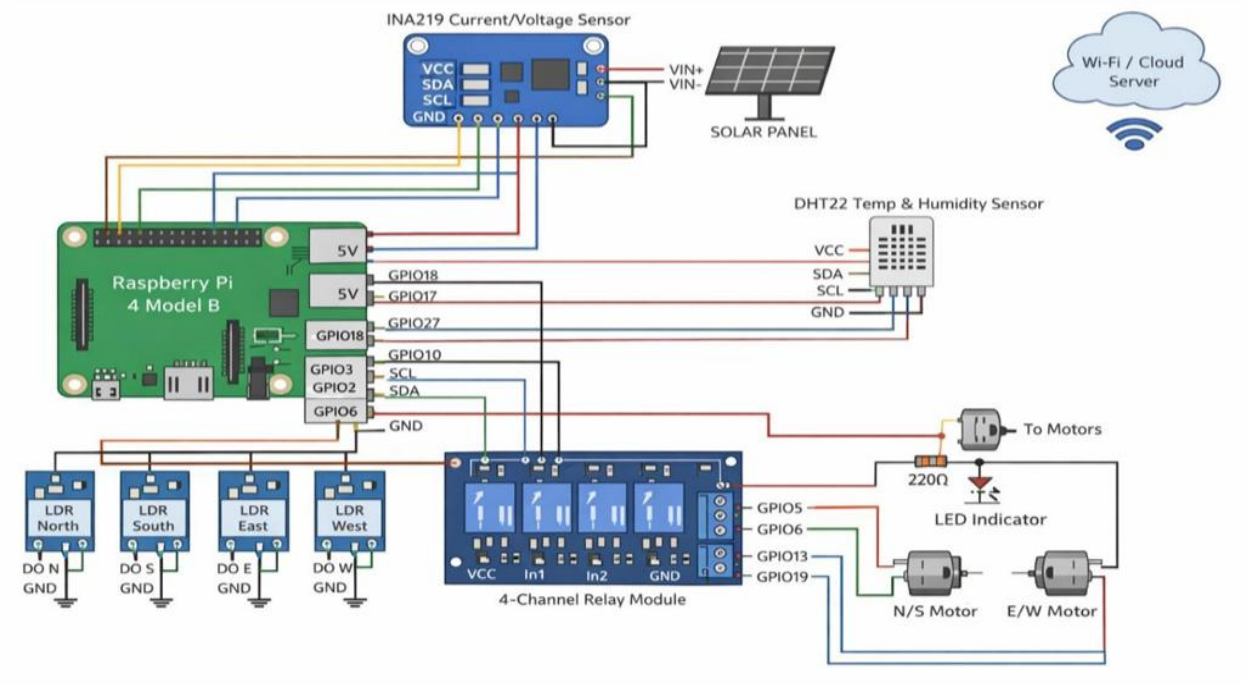

"Fig. 1. Hardware architecture and control circuit of the proposed SOLVYN-based solar PV system."

The suggested hardware comprises a 20 W solar photovoltaic panel, INA219 electrical sensor, DHT22 environmental sensor, four LDRs (light-dependent resistors), Raspberry Pi 4 model B, relay module, and a dual-axis DC motor arrangement. The INA219 has been considered for sensing the PV panel's electrical parameters, whereas the DHT22 has been considered for obtaining the ambient temperature and humidity. The four LDRs have been placed in four different directions (north, south, east, and west) to obtain the relative illumination levels at the solar panel and hence determine its position for dual-axis tracking. The Raspberry Pi 4 has been considered as the central processing and controlling unit, which processes the sensor data, carries out the AI predictive computation, and finally generates the control signals for the motor driver circuit. The relay module enables the switching of the motor driver circuit. The data acquired from the sensors are transmitted to the SOLVYN (Solar Intelligence Overview) software system for predictive analysis, controlling, and monitoring of the solar system. Thus, the system provides a holistic view of the monitoring and controlling of the solar PV system with AI prediction being carried out on the cloud-based software.

V. SYSTEM IMPLEMENTATION AND WORKING

A. Hardware Configuration

The proposed solar-energy system is implemented by utilizing a compact embedded hardware solution. The Raspberry Pi 4 Model B is used as the main control board, as it is capable of sensor data acquisition, processing, AI inference, actuation, and communication with the monitoring application.

In this project, a 20 W solar panel is utilized. The electrical characteristics of this photovoltaic panel are monitored by a voltage and current sensor, INA219. The sensor helps the system to stay informed about the operational status of the PV module.

A DHT22 temperature and humidity sensor were used to monitor the environmental parameters. Four light-dependent resistors (LDR) were placed around the solar panel to identify the differential variations in the light spots. This information was fed to the tracking mechanism, where the system decided which direction to move the solar panel. The movement of the solar panel was achieved by using DC motors. For automatic cleaning of the solar panel, a relay module and water pump were connected to the Raspberry Pi. Whenever a dirty condition was achieved, the relay module activated the water pump and initiated the autonomous cleaning process of the solar panel. The hardware configuration follows the components as described in the supplied project presentation.

B. Software Configuration

The software system is based on the concept of SOLVYN (Solar Intelligence Overview). It is the central nervous system that controls, monitors, analyzes, and manages the solar-energy system.

The software program operates by utilizing the Python programming language, interfaced with the corresponding libraries for the respective processes using NumPy for data processing and analysis, Scikit-learn for machine learning and artificial intelligence, and random forest for predicting solar energy generation.

The system consisting of hardware components is based on the Flask framework (for web-based applications), ThingSpeak for data communication, and Raspberry Pi OS. All of the programs are run on Raspberry Pi OS, and the development is performed using VS Code and Thonny.

C. Sensor Data Collection

The first stage of the system operation cycle is data collection. In particular, sensors continuously report information about the physical and electrical condition of the solar panel.

The DHT22 provides the temperature and humidity information, the LDRs provide the light-direction information, and the INA219 provides voltage and current measurements. Such data are collected and forwarded by the Raspberry Pi to the processing stage, implemented in the form of SOLVYN.

Such continuous measurements allow the system to assess how environmental conditions impact solar-power generation. Furthermore, the data collected are the basis for AI prediction, tracking control, and system analysis.

D. Data Processing and AI Prediction

Having been collected by the Raspberry Pi, data undergo processing in SOLVYN. In particular, they are filtered, prepared, and then used for training the Random Forest regressor.

The latter is used to model the dependencies between environmental conditions and solar-power generation. As a result, the model is able to predict a PV's output, given the current state of the environment as reported by sensors.

The prediction results are then visualized along with the actual values reported by the INA219 in SOLVYN. Thus, the user is able to see how much power the system is predicted to generate versus the actual power being collected.

In general, the project methodology described in the original presentation follows the data collection, preprocessing, Random Forest training and prediction, control, and IoT uploading phases.

E. Solar Tracking Operation

The solar tracking system's objective is to ensure that the panel is always aligned at the strongest available light direction.

For that purpose, four LDRs are used to assess the light intensity distribution across the panel perimeter. If one side is darker than the others, the Raspberry Pi identifies this condition and causes a DC motor to rotate the panel around its axis to compensate for this imbalance.

This process is repeated throughout the operation of the tracker, ensuring that it follows the sun's movement. The user can monitor the tracking process via SOLVYN, which reports the status of the system. Furthermore, the closed-loop approach ensures simplicity and sufficient efficiency for the prototype while allowing for logging the tracking data for analysis.

F. Automatic Cleaning Operation

It is established that the accumulation of dust on a solar panel can decrease the amount of sunlight that reaches its photovoltaic surface. Therefore, the proposed system includes an automatic cleaning mechanism.

When the system reaches the appropriate cleaning condition, SOLVYN sends a control command to the

Raspberry Pi, which turns on the relay and activates the water pump. The pump conducts the cleaning process and then stops when the previously defined cleaning process is completed.

The cleaning event can be stored together with the corresponding PV operating conditions by SOLVYN to investigate its impact on the system performance and to check if the cleaning action actually results in an increase of power production.

G. SOLVYN Monitoring and Analysis

The major role of SOLVYN is to provide all-in-one system information, instead of monitoring each sub-system individually. The presented application can be used to observe not only real-time voltage and current, measured solar power, AI-predicted solar power, temperature, humidity, light-sensor information, tracking status, cleaning status, and communication status.

This information can be used to understand what is currently happening in the solar system with the help of the latest updates. Moreover, SOLVYN can be utilized for performance analysis due to its ability to compare predicted and measured solar power, tracking and fixed panel operation, and to assess panel performance prior and after cleaning. The provided project presentation highlights the critical comparisons during the working of the system.

I. Key Features of the Proposed System

The key features of the described architecture are as follows.

- Intelligent prediction: AI is employed in the system to predict solar-power production from the information provided by sensors.
- Automatic tracking: The position of the solar panel is constantly updated according to the changes in light intensity.
- Automatic cleaning: The automatic maintenance procedure minimizes the need for the user's panel maintenance.
- Centralized monitoring: SOLVYN provides all information about the system in a single interface and can be used for performance analysis.
- Real-time operation: Both sensors and Raspberry Pi can be operated in real-time, allowing the users to continuously observe the operation of their solar system.
- Integrated control: The control over prediction, tracking, cleaning, and monitoring is integrated via the Raspberry Pi-based control system.

VI. FLOWCHART OF THE PROPOSED SOLVYN-BASED SOLAR SYSTEM

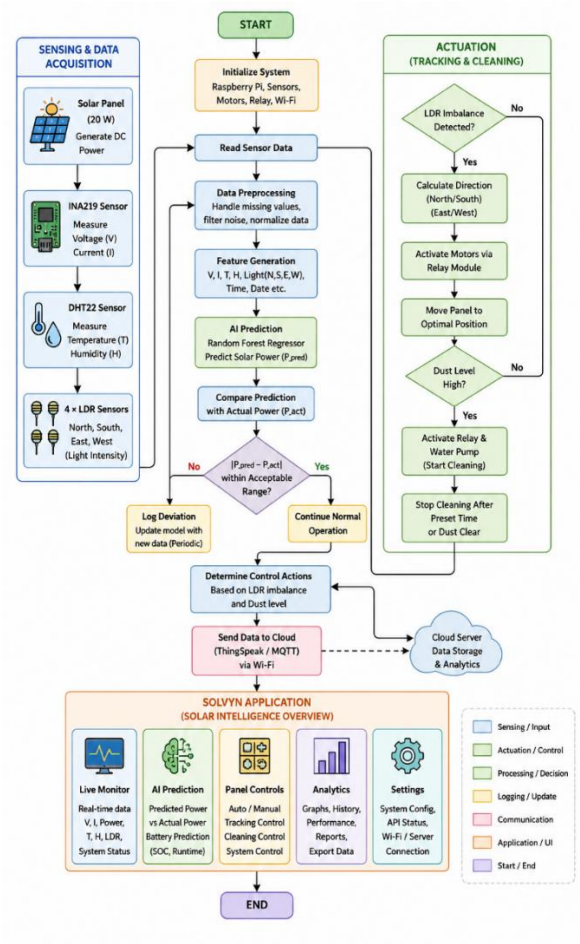

"Fig. 2. Flowchart of the proposed AI-based solar power prediction, tracking, cleaning, and SOLVYN monitoring system"

The proposed system involves the continuous cycle of sensing, processing, prediction, control, and monitoring as shown. First, the Raspberry Pi 4 and connected sensors were initialized. The INA219 sensor was used to read the electrical values, whereas the DHT22 and LDR sensors acquired the environmental and directional data. It was processed and sent to the integrated Random Forest model for the solar-power prediction. The predicted result was compared to the measured system condition for performance analysis. Simultaneously, the LDR

sensor data were used to control the motor driver via the dual-axis tracking mechanism, while the cleaning procedure started when the indicated cleaning condition was met. The processed information and system status were reported through the backend and IoT layer to the SOLVYN platform, where the live monitoring, AI prediction, panel control, analytics, and settings were available. The process was ongoing, allowing real-time supervision and analysis of the solar-energy system.

VII. EXPERIMENTAL SETUP AND PERFORMANCE EVALUATION

A. Experimental Setup

The proposed system is implemented as a small-scale solar PV prototype with a 20 W solar panel and a Raspberry Pi 4 Model B for the processing and control function. The prototype includes an INA 219 sensor for electrical measures, a DHT 22 sensor for temperature-humidity, four LDR sensors for solar tracking, DC motors for the panel movement, and a relay-controlled water pump for the automatic cleaning.

The software environment includes Python-based data processing and machine-learning functions and the SOLVYN application. This application incorporates scikit-learn for the Random Forest model, Flask provides the backend interface, and ThingSpeak/MQTT supports the connected monitoring.

Thus, the developed SOLVYN application provides a practical interface for operating and evaluating the prototype. The application includes a live monitoring section, an AI prediction section, a panel-control section, and a system-connection section. The AI prediction interface provides solar-generation forecasting using the Random Forest model. The control interface provides automatic tracking and cleaning functions.

B. Data Collection

The data-collection stage is designed to obtain both environmental and electrical information from the PV system. Temperature and humidity are obtained from the DHT 22 sensor, the light information from the LDR sensors, and the voltage and current from the INA 219 sensor.

The collected data are transmitted to the Raspberry Pi and made available to SOLVYN for processing. The continuous data collection is important since solar-power generation changes throughout the day and is influenced by the environmental conditions.

The original project methodology defines the process as environmental and electrical data collection followed by the preprocessing, Random Forest training, prediction, tracking and cleaning control, and IoT upload.

C. AI Model Evaluation

The AI component is evaluated by comparing the predicted solar output with the corresponding measured output. The primary model used in the project is Random Forest. The objective is to determine how effectively the model represents the relationship between the environmental conditions and PV generation.

For publication, the evaluation should report at least the following:

Prediction accuracy: comparison of the predicted and measured solar-power values.

RMSE: measurement of the overall prediction error.

MAE: measurement of the average absolute prediction error.

R^2: assessment of how well the model explains the variation in the measured output.

The project documentation reports an RMSE of approximately 2.45 W and an R^2 of about 0.95 for the Random Forest model. These values should be retained in the final paper only after checking against the actual experimental dataset and test procedure.

D. Solar Tracking Evaluation

The tracking performance is evaluated by comparing the operation of the automatically tracked panel with a fixed-panel configuration.

During the automatic operation, the four LDR sensors provide light-direction feedback, and the DC motors adjust the panel orientation. The SOLVYN panel-control interface allows automatic tracking as well as a manual fixed position, which makes this comparison possible.

The following parameters are useful for evaluating the tracking system:

- Energy generated during tracking operation

- Energy generated during fixed-panel operation
- Tracking response and stability
- Panel position and angle
- Motor operating frequency
- Energy consumed by the tracking mechanism

The project documentation reports that the dual-axis tracking mechanism improved energy harvesting compared with a fixed configuration.
For a scientific comparison, both configurations should be tested under similar environmental conditions so that the difference in generated energy can be associated primarily with the tracking mechanism.

E. Cleaning System Evaluation
The cleaning mechanism is evaluated through observation of PV performance before and after an automatic cleaning operation.
The cleaning subsystem uses a relay and water pump to remove accumulated dust from the panel. SOLVYN provides control over the cleaning operation and displays cleaning-related status information. The developed interface also records completed cleaning cycles.

The main evaluation parameters are
- PV output before cleaning
- PV output after cleaning
- Change in power generation
- Cleaning duration
- Water consumption
- Number of cleaning cycles
- Reliability of automatic operation

This evaluation determines whether the cleaning mechanism provides a measurable recovery in PV output and whether the improvement justifies the resources required for cleaning.

F. SOLVYN Application Evaluation
In addition to hardware performance, the SOLVYN application itself can be evaluated as a software-based supervisory platform.
The application provides real-time information related to solar generation and environmental conditions. It also provides AI prediction functions and direct controls for the panel tracking and cleaning mechanisms.

The live-monitoring interface displays information such as solar power, voltage, current, temperature, humidity, solar radiation, and operating status. The AI interface provides solar-power prediction and battery-related prediction functions. The panel-control interface provides automatic tracking, manual panel positioning, and cleaning control.
This integrated interface demonstrates that SOLVYN is not limited to displaying data. It provides a connection between monitoring, prediction, analysis, and physical system control.

G. IoT and Communication Evaluation
The communication system is evaluated through observation of whether measurements and system states are successfully transferred between the hardware, backend, and monitoring application.
The project uses a Flask-based backend together with ThingSpeak/MQTT communication technologies. The SOLVYN settings interface also provides backend connection monitoring and connection-testing functionality.
Important communication parameters include data-update reliability, response time, connection status, data availability, and system recovery after communication interruption.
Reliable communication is important because the AI prediction, remote monitoring, and supervisory-control functions depend on continuous access to current system information.

H. Reported Project Performance
The supplied project poster reports that the developed prototype was tested under outdoor conditions and achieved approximately 40% improvement in daily energy generation compared with a fixed-panel system. It also reports approximately 2.45 W RMSE and 0.95 R^2 for the Random Forest prediction model.
These results indicate that the integrated approach has potential to improve both energies harvesting and solar-power prediction. However, for formal publication, the reported values should be supported with the complete experimental dataset, test duration, environmental conditions, number of observations, baseline definition, and detailed evaluation procedure.
The paper should therefore distinguish between project-reported results and independently reproducible results. This distinction improves the technical reliability of the publication.

I. Overall Performance Evaluation

The complete system should be evaluated at three levels.

At the AI level, the primary concern is prediction accuracy.

At the hardware level, the main concerns are tracking performance, cleaning effectiveness, energy generation, and actuator operation.

At the software level, the main concerns are real-time monitoring, communication reliability, system control, and data analysis.

This multi-level evaluation is important because a solar system can achieve good prediction accuracy while still having inefficient mechanical control, or it can improve energy generation while consuming excessive actuator energy. Therefore, the final performance of the system should be considered from an integrated perspective.

VIII. RESULTS AND DISCUSSION

A. Overview

The proposed system integrates four functions: AI-based solar-power prediction, dual-axis solar tracking, automatic panel cleaning, and SOLVYN-based monitoring and control. Thus, the results must be discussed in terms of prediction accuracy as well as the overall behavior of the integrated system.

The supplied project documentation states that the prototype was tested under outdoor conditions, and that the combined system improved the daily energy generation compared with a fixed-panel configuration. The Random Forest prediction model and real-time monitoring through the software were successfully performed.

B. Solar Power Prediction Results

The Random Forest model is employed in SOLVYN to predict solar-power generation from the available sensor information. The prediction module employs real-time system measurements and environmental information as input models.

According to the supplied project results, the Random Forest model achieved an RMSE of ~2.45 W and R^2 value of ~0.95.

Such values indicate a strong relationship between the predicted and measured power values for the reported test conditions. The prediction result shows the usefulness of machine learning for short-term solar-power estimation in the proposed system.

However, prediction accuracy can vary with weather conditions, quantity of training data, sensor quality, and selected input features. Therefore, future tests should include different weather conditions and longer observation periods to assess the generalization capability of the model.

C. Tracking Performance

The dual-axis tracking mechanism aims to maintain a better alignment between the solar panel and the available sunlight. Four LDR sensors provide directional feedback, and DC motors adjust the panel's position.

The project results indicate that the tracking system increased the solar-energy harvesting compared with a fixed-panel configuration.

The main reason behind this improvement is the adjustment of the panel position during changing solar conditions. Compared with a fixed panel, the tracking system can maintain a more favorable orientation for a greater portion of the operating time.

The SOLVYN control interface is a valuable addition, as it allows the user to observe the tracking state and panel position. It supports automatic and manual operating modes. Thus, it is possible to study tracking performance under different operating conditions.

D. Cleaning System Performance

Dust accumulation can reduce the useful sunlight received by the PV surface. The proposed cleaning mechanism is designed to address this problem through automatic operation.

The system activates the cleaning mechanism through the control layer when cleaning is required. The relay operates the water pump, while the wiper mechanism removes the accumulated material from the panel surface.

The project documentation reports successful automatic cleaning operation and identifies automatic dust removal as one of the expected system outcomes. The cleaning mechanism is particularly useful as it reduces the need for continuous manual intervention. For a stronger experimental analysis, the final study should compare the power output before and after cleaning and record the cleaning time and resource consumption.

E. SOLVYN Monitoring Performance

One of the major contributions of the proposed project is the integration of all system functions into the SOLVYN application.

The live-monitoring interface provides information about electrical and environmental conditions. The AI Prediction section provides solar-generation forecasting and battery-related prediction functions. The Panel Controls section provides automatic solar tracking and cleaning control. The Settings section provides system-connection and backend status information.

This integration allows the user to observe the complete condition of the system through a single software platform.

The project software architecture employs Flask, Scikit-learn, Python, ThingSpeak/MQTT, and Raspberry Pi-based processing to support communication between the physical system and the software environment.

F. Integration of AI and Physical Control

A key result of the proposed system is the integration of prediction with the physical system operation.

In a conventional PV monitoring system, the user may only observe the present electrical output. In the proposed approach, SOLVYN adds AI-based prediction to the monitoring process. The predicted output can be compared with the measured output, while the physical control modules continue to manage the panel orientation and cleaning.

This provides a more complete system view, as:

- Prediction provides expected system behavior.
- Tracking attempts to improve solar-energy capture.
- Cleaning helps maintain the PV surface.
- Monitoring provides real-time visibility.
- Analysis helps evaluate system performance.

The combination of these functions is the main strength of the proposed architecture.

G. Comparison with Fixed-Panel Operation

The supplied project results report ~40% improvement in daily energy generation compared with a fixed-panel system.

This reported improvement implies that the tracking mechanism can provide a meaningful increase in solar-energy capture under the tested conditions. However, this value should be interpreted with the experimental conditions in mind. The actual improvement can vary depending on geographical location, season, solar availability, tracking accuracy, motor consumption, and duration of the comparison.

For publication, the comparison should clearly state that the percentage improvement is calculated using matched measurement periods and should include the corresponding measured energy values.

H. Effect of the Integrated Approach

The integrated architecture provides advantages beyond those obtained from any single subsystem.

The AI module provides prediction capability, allowing the system to estimate expected output.

The tracking mechanism continuously adjusts the panel orientation.

The cleaning system addresses the effect of dust accumulation.

SOLVYN combines the resulting information and provides centralized monitoring and system control.

This combination can support improved operational decision-making. For instance, a reduction in measured output can be analyzed using environmental information, predicted output, tracking status, and cleaning history. Thus, it is possible to identify whether the change is related to weather, panel orientation, soiling, or another operating condition.

I. Discussion of SOLVYN as a Research Contribution

The development of SOLVYN provides a distinct software contribution to the project. Rather than implementing separate interfaces for AI prediction, system monitoring, and hardware control, SOLVYN combines these functions into a single application.

This architecture improves usability and simplifies system supervision. It also creates a structured environment for collecting historical data and performing future analysis.

The present application can be extended with additional AI functions such as anomaly detection, predictive maintenance, adaptive tracking, intelligent cleaning scheduling, and improved time-series forecasting.

Thus, SOLVYN can be considered an intelligent supervisory platform for solar-energy systems, while the Raspberry Pi and sensors provide the physical and computational infrastructure required for its operation.

J. Limitations of the Results

Although the reported results are promising, several factors should be considered when interpreting them.

First, the prototype uses a relatively small (20 W) solar panel, thus the reported energy improvement cannot automatically be generalized to larger PV installations.

Second, the Random Forest performance depends strongly on the available training data and operating conditions. Third, the tracking and cleaning mechanisms consume additional energy and resources, which should be included when calculating the net system performance.

Finally, the reported 2.45 W RMSE, 0.95 R^2, and ~40% energy improvement come from the supplied project documentation. For a final research publication, these values should be supported by the raw dataset and a clearly described experimental protocol.

IX. APPLICATIONS AND FUTURE SCOPE

A. Applications

The proposed SOLVYN-based solar-energy solution is applicable across several domains that require reliable solar-power generation, management, and maintenance. The solution using AI prediction, autonomous tracking, cleaning, and remote monitoring could be applied to both prototype experimentation and real-world implementation scenarios.

1. Residential Solar Systems

The suggested system could be applied to home-solar installations to monitor the power generated by the photovoltaic (PV) modules. Using SOLVYN, the status of residential rooftop solar systems could be tracked to predict current and future power generation. Additionally, autonomous tracking and cleaning could reduce the manual effort required to maintain such an installation.

2. Industrial Solar Installations

Large-scale industrial solar installations usually require constant monitoring due to their high-value and high-power characteristics. Any deviation in the generated power could indicate a possible fault in the system. The proposed solution could provide operators with insights into the current power generation, environmental conditions, tracking status, and cleaning schedule. Using such a solar system-monitoring platform, anomalies could be detected at an early stage.

3. Agricultural Solar Installations

Solar farms are widely applied in agricultural activities, including crop irrigation and water pumping. These solar installations usually have large-scale PV systems that require constant maintenance. An autonomous, smart solar system using AI prediction, tracking, and cleaning could be applied in agricultural settings to ensure the continuous operation of the solar installation.

4. Remote Solar Installations

Many solar installations, especially the large-scale ones, are deployed at remote locations to capitalize on the high solar irradiance in such regions. Such installations could benefit from the remote monitoring capabilities of the proposed solution. Using the IoT layer, the status of remote solar installations could be tracked without the need for manual inspection. This would reduce the manual effort required for such solar installations.

5. Smart Energy Management

The AI prediction component of SOLVYN could be used to provide forecasts of the solar installation's generation capacity. These forecasts could be used to provide insights for smart energy management. In the future, this component of the proposed system could be used alongside battery storage, loads, and grid connection to achieve advanced smart-energy management solutions.

6. Academic Applications

The proposed prototype could be used for various academic applications due to the range of functionalities it provides. First, the proposed system is an excellent example of a smart-solar solution, combining several functionalities in one platform. Therefore, it could be used as a teaching tool to demonstrate concepts of machine learning, the Internet of Things, solar tracking, and autonomous cleaning among other skills. Additionally, the proposed platform could be modified to support other academic experiments because of its modular nature. The modification would be relatively easy due to the use of separate hardware and software components that could

be replaced without altering the other parts of the system.

B. Future Scope

The proposed solution is only the first step in the development of advanced solar-installation monitoring and management systems. Several future improvements could be considered in the next stages of this research.

1. Advanced AI Models

The random forest algorithm could be compared with other advanced machine learning algorithms such as XGBoost and time-series algorithms such as LSTM and GRU. More data could also be used to enhance the prediction performance of the random forest algorithm, including data with varying weather conditions.

2. Intelligent Cleaning

The cleaning subroutine of the proposed system triggers cleaning when the cleaning condition is satisfied. Future improvements to the proposed system could apply AI to estimate the level of dust accumulation and predict when the best time to clean the PV module is. This would reduce the number of cleaning events and the associated wastage of resources.

3. Solar Tracking Improvements

The current design uses a simple light-dependent resistor (LDR) circuit to control the motor that rotates the solar panel. Future improvements could explore the use of encoder feedback, solar-position calculation algorithms, and advanced motor controllers to make the solar tracker more efficient.

4. Predictive Maintenance

The proposed system could be modified to monitor the long-term behavior of the solar installation and predict possible faults. For instance, abnormal behavior of the motor, power generation, sensors, and cleaning subroutine could be used to predict possible malfunctions in the system. This would enable predictive maintenance, which ultimately reduces the maintenance cost of the solar installation.

5. Enhanced SOLVYN Analytics

The proposed SOLVYN analytics dashboard has several limitations that could be addressed in the future. First, the dashboard should include visual features such as graphs and reports to enable users to better comprehend the performance of the solar installation. Additionally, the dashboard should be modified to provide more insightful information on the performance of the solar installation under different environmental conditions and give alerts.

6. Battery and Storage Management

The developed SOLVYN dashboard already includes a battery predictor. Future improvements to the proposed solution could explore advanced battery-management systems that could be integrated into the PV installation to manage the battery's charging and discharging in conjunction with the solar-power prediction.

7. Edge AI

AI algorithms can be utilized by making adaptations to the existing framework of the proposed solution. One way this can be accomplished is by confining the AI processing and computational task to the Raspberry Pi, eliminating any reliance on external servers. In this case, the autonomous operation of the presented framework will be ensured regardless of Internet connectivity status.

8. Large-Scale PV Systems

The prototype described in this project uses a 20 W solar panel. Future improvements to the proposed system could explore the use of larger solar panels and PV arrays. Additionally, modifications to the system would be required for large-scale PV installations, including modifications to the sensing, motor-control, power-management, communication, and protection circuits.

X. CONCLUSION

The proposed project integrates an AI-enabled solar-power prediction model, two-axis tracking mechanisms, autonomous panel cleaning solutions, IoT-linked smart monitoring systems, and the innovative SOLVYN Solar Intelligence Overview software application for the first time in a unified smart-solar-energy concept.

The computing core of the Raspberry Pi 4 and connected sensors enable the collection of the required data and the implementation of the necessary

operations, including prediction, tracking, and cleaning. The Random Forest algorithm enables accurate forecasting, while the system's tracking and cleaning mechanisms ensure the panels' optimal performance. Finally, SOLVYN allows for the integration and implementation of monitoring, control, prediction, and analysis in a single working environment.

The obtained results are promising, with the prototype demonstrating its ability to increase the daily energy production by approximately 40%, with an RMSE of approximately 2.45 W and an R^2 of approximately 0.95. However, these results should be validated using the final data to ensure their accuracy before publishing the final version of the paper.

The significance of the present work lies in the proposed concept of integrating AI and autonomous-solar mechanisms in a single platform, which is implemented in the SOLVYN software. The obtained results can become the basis for further studies on predictive maintenance, cleaning, and tracking mechanisms, AI-enabled forecasting models, and smart-solar-energy management systems, as well as edge AI, machine learning, and computer vision solutions for the photovoltaic industry.

Thus, the proposed solution can be considered a valuable contribution to the field, enabling the creation of a truly smart, autonomous, connected, and self-sustaining photovoltaic power plant.

REFERENCES

[1] N. Jain and D. Naik, "AI-based solar power forecasting," in *Proc. 15th Int. Conf. Computing Communication and Networking Technologies (ICCCNT)*, 2024. [Project-supplied reference.]

[2] H. ElMoaqet *et al*., "Predicting solar photovoltaic power production using artificial intelligence-based algorithms," in *Proc. IEEE Int. Symp.*, 2024. [Project-supplied reference.]

[3] G. Piantadosi *et al*., "Photovoltaic power forecasting: A transformer-based framework," *Energy and AI*, 2024.

[4] L. de Oliveira Santos *et al*., "Photovoltaic power estimation and forecast models integrating physics and machine learning: A review on hybrid techniques," *Solar Energy*, 2024.

[5] H. A. Kazem, M. T. Chaichan, A. H. A. Al-Waeli, and K. Sopian, "Recent advancements in solar photovoltaic tracking systems: An in-depth review of technologies, performance metrics, and future trends," *Solar Energy*, vol. 282, 2024.

[6] N. Kuttybay *et al*., "Assessment of solar tracking systems: A comprehensive review," *Sustainable Energy Technologies and Assessments*, vol. 68, 2024.

[7] H. S. N. Murthy *et al*., "Dual axis solar tracking system," in *Proc. ICICAT*, 2024. [Project-supplied reference.]

[8] L. Wan, L. Zhao, W. Xu, F. Guo, and X. Jiang, "Dust deposition on the photovoltaic panel: A comprehensive survey on mechanisms, effects, mathematical modeling, cleaning methods, and monitoring systems," *Solar Energy*, vol. 268, 2024.

[9] "Dust impact on solar PV performance: A critical review of optimal cleaning techniques for yield enhancement across varied environmental conditions," *Energy Reports*, vol. 12, 2024.

[10] N. Shahzad *et al*., "Impacts of soiling on solar panel performance and state-of-the-art effective cleaning methods: A recent review," *Journal of Cleaner Production*, 2025.

[11] I. Kishor *et al*., "AI-integrated autonomous robotics for solar panel cleaning and predictive maintenance," *Scientific Reports*, vol. 15, 2025. [Project-supplied reference.]

[12] "An open-source supervisory control and data acquisition architecture for photovoltaic system monitoring using ESP32, Banana Pi M4, and Node-RED," *Energies*, vol. 17, 2024.

[13] "Open-source Internet of Things-based supervisory control and data acquisition system for photovoltaic monitoring and control using HTTP and TCP/IP protocols," *Energies*, vol. 17, 2024.

[14] "IoT-based monitoring of photovoltaic systems using Raspberry Pi," *Engineering, Technology & Applied Science Research*, vol. 14, 2024.

[15] "Design and experimental validation of a low-cost edge-IoT architecture for sustainable photovoltaic monitoring and adaptive MPPT control," *Sustainability*, 2026.

[16] C. Alexandru, "Simulation and optimization of a dual-axis solar tracking mechanism," *Mathematics*, vol. 12, 2024.

[17] D. A. Flores-Hernández, L. R. Islas-Estrada, and S. I. Palomino-Resendiz, "A novel tracking strategy based on real-time monitoring to increase the lifetime of dual-axis solar tracking systems," *Applied Sciences*, vol. 14, 2024.

[18] O. More *et al*., "Automatic solar panel cleaning system," *International Journal of Advanced Research in Electrical, Electronics and Instrumentation Engineering*, vol. 13, no. 4, 2024. [Project-supplied reference.]

[19] Project Presentation, "AI-based solar power prediction with cleaning & tracking mechanisms," supplied project documentation.

[20] Project Poster, "AI-based solar power prediction with cleaning & tracking mechanisms," supplied project documentation.