Design, Simulation and Proof-of-Concept Prototype of a Low-Cost Solar-Powered Mobile Charging Station

Prof. Rohan Shinde[1], Vishwajeet Sherkhane[2], Aryan Parge[3], Atharva Putanghar[4], Shridhar Mahamuni[5]
[1]*Assistant Professor, Department of Electronics & Communication Engineering, School of Engineering & Sciences, MIT Art, Design & Technology University, Pune, India*
[2,3,4,5]*UG Scholar, Department of Electronics & Communication Engineering, School of Engineering & Sciences, MIT Art, Design & Technology University, Pune, India*

***Abstract*—Conventional mobile phone chargers depend on the electrical grid, so users lose charging access during power outages and in off-grid rural areas. This paper presents the design, simulation and proof-of-concept prototype of a low-cost, battery-backed solar-powered mobile charging station. In the proposed design, a 20 W, 12 V photovoltaic (PV) panel charges a 12 V, 7 Ah sealed lead-acid battery through a 10 A PWM charge controller with overcharge and low-voltage protection, and an LM2596 buck converter supplies a regulated 5 V USB output. Panel and battery sizes are derived from a daily load of two smartphone charges (38.5 Wh at the USB port) with one day of autonomy. Multisim simulation of a linear LM7805 stage shows that a 6 V input gives only 4.485 V, below the USB minimum. A breadboard prototype using a mini solar panel and an LM7805 regulator charged a smartphone in direct sunlight, but its output varied with irradiance, confirming the need for battery-backed storage. Design analysis shows that a switching buck converter halves the required battery and panel size compared with a linear regulator. The proposed station provides an estimated 8.6 h of backup at 1 A, recharges in about 4.3 peak-sun hours, and costs about ₹2,860 in components at November 2026 market prices.**

***Index Terms*—Battery sizing, charge controller, DC-DC buck converter, mobile charging, off-grid charging, photovoltaic panel, solar charging station.**

I. INTRODUCTION

Mobile phones are now essential for communication, banking, navigation and emergency alerts, yet almost every phone charger draws power from the grid. During power cuts, natural disasters, travel and in off-grid villages, users cannot recharge. Solar photovoltaic (PV) energy is a suitable alternative in India, where most regions receive about 4–7 kWh/m^2 of solar radiation per day [1].

Solar charging systems pair a PV source with charge regulation, energy storage and power conditioning, and they range from kilowatt-scale electric vehicle (EV) stations [2], [5], [6] to small mobile chargers [3], [7]. Large stations are costly and complex. Very small chargers that charge a phone directly from a panel stop working as soon as sunlight drops.

This work targets the gap between the two: a compact, low-cost station that stores solar energy in a battery and supplies a regulated 5 V USB output by day and at night. The contributions of this paper are:

1) A complete design of a battery-backed solar mobile charging station, with panel and battery sizing derived from the daily load.
2) Circuit simulation of the 5 V regulation stage and a breadboard proof-of-concept prototype that charges a smartphone directly from a solar panel.
3) A quantitative comparison of linear and switching regulation, calculated system performance (backup, recharge and phone charging time) and a component-level cost analysis based on current Indian market prices.

The rest of the paper is organised as follows. Section II reviews related work. Sections III and IV present the system and its design calculations. Section V covers circuit design and simulation, and Section VI the control logic. Section VII describes the proof-of-concept prototype. Section VIII reports the results, Section IX gives the cost, and Section X concludes, with future work in Section XI.

II. LITERATURE SURVEY

Existing solar charging work falls into two groups. Large EV stations show how PV, storage and grid backup can be sized together. Small mobile chargers show the low-cost hardware choices.

A. Solar EV Charging Stations

Alrubaie et al. [2] review PV-based EV charging stations, covering market status, technical requirements, grid impact and open challenges. Singh et al. [4] use PVsyst to design an off-grid solar EV charging station for Indian cities. Badea et al. [6] design and simulate a solar EV charging station for Romania and report its energy, environmental and economic performance over a year of operation. Singla et al. [5] simulate a 4 kW hybrid station that combines a PV array, a battery bank and the grid with a three-stage charge controller and P&O MPPT. These studies establish the PV–storage–converter architecture, but at a cost and scale far beyond a mobile charging point.

B. Solar Mobile Charging Stations

Tran et al. [3] built and tested a public solar charging station for phones, tablets and laptops with wireless charging, sized for an average load of 175 Wh. Labade et al. [7] built a phone charger around a sun-tracking solar panel controlled by an Arduino Uno. Both confirm that solar mobile charging works in practice. Neither reports a step-by-step sizing method or a detailed cost breakdown that a low-budget builder can reuse.

C. Research Gap

Few papers present a battery-backed mobile charging station that combines (i) explicit panel and battery sizing from the load, (ii) a regulated 5 V output verified by simulation, and (iii) a component-level cost analysis using parts available in Indian markets. This paper addresses that gap.

III. PROPOSED SYSTEM

The station has five stages: PV generation, charge regulation, storage, DC-DC conversion and USB output (Fig. 1). The PV panel feeds the charge controller, which charges the battery and disconnects the load when the battery is low. The buck converter draws from the controller's load terminals and supplies a regulated 5 V to two USB ports. A voltmeter-ammeter display shows the output voltage and current.

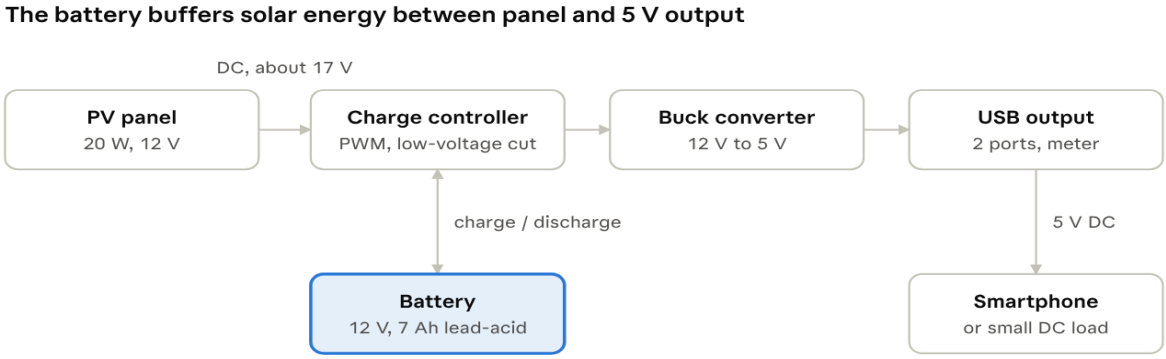

Fig. 1. Block diagram of the solar charging station.

Table I lists the components and the function of each.

TABLE I COMPONENT SPECIFICATIONS

Component	Specification	Function
PV panel	20 W polycrystalline, 12 V; Vmp ≈ 17.5 V, Imp ≈ 1.14 A, Voc ≈ 21.5 V	Converts sunlight to DC power
Charge controller	12 V, 10 A PWM, low-voltage disconnect	Prevents overcharge and deep discharge
Battery	12 V, 7 Ah sealed lead-acid (SMF)	Stores energy for night and cloudy hours

Buck converter	LM2596 module, 4.5–40 V in, set to 5.1 V, up to 3 A	Steps 12 V down to a regulated 5 V
USB output	2 × USB-A, 5 V, 2 A total	Connects phones and small DC loads
Meter and protection	Voltmeter-ammeter, 3 A fuse, switch, LED	Monitoring and safety
Enclosure and wiring	ABS box, 1 mm^2 copper wire	Housing and connections

IV. DESIGN CALCULATIONS

A 20 W panel and a 12 V, 7 Ah battery cover two full phone charges per day with one day of autonomy, as derived below.

A. Daily Load

The design load is two full charges per day (n = 2) of a smartphone with a 4000 mAh (C_{ph}), 3.85 V (V_{ph}) battery. Taking phone-side charging efficiency η_{ph} = 0.8, the daily energy at the USB port is

$$E_{USB} = n\, C_{ph}\, V_{ph} / \eta_{ph} \quad (1)$$

which gives E_{USB} = (2 × 4 Ah × 3.85 V)/0.8 = 38.5 Wh/day. With buck converter efficiency η_c = 0.85 [8], the energy drawn from the battery is

$$E_B = E_{USB} / \eta_c \quad (2)$$

so E_B = 38.5/0.85 ≈ 45.3 Wh/day.

B. Battery Sizing

For N = 1 day of autonomy, system voltage V_B = 12 V and an allowed depth of discharge DoD = 0.6 for sealed lead-acid, the required capacity is

$$C_B = E_B\, N / (V_B\, DoD) \quad (3)$$

giving C_B = (45.3 × 1)/(12 × 0.6) ≈ 6.3 Ah. A 12 V, 7 Ah battery is selected.

C. PV Panel Sizing

Pune receives roughly 5 peak sun hours (PSH) per day, within the 4–7 kWh/m^2/day range reported for India [1]. Taking battery charging efficiency η_b = 0.85 and a derating factor k = 0.75 for temperature, dust, wiring and PWM losses,

$$P_{PV} = E_B / (\eta_b\, PSH\, k) \quad (4)$$

which gives P_{PV} = 45.3/(0.85 × 5 × 0.75) ≈ 14.2 W. A 20 W panel is selected; the extra margin covers partly cloudy days and winter months.

D. Battery Recharge Time

Restoring the usable capacity at the panel's maximum-power current I_{mp} = 1.14 A takes

$$t_{ch} = C_B\, DoD / (I_{mp}\, \eta_b) \quad (5)$$

so t_{ch} = (7 × 0.6)/(1.14 × 0.85) ≈ 4.3 h of peak sun.

E. Backup Time and Converter Current

The usable stored energy at the USB port is 7 Ah × 12 V × 0.6 × 0.85 ≈ 42.8 Wh. This gives about 8.6 h at a single 1 A load (5 W) or 4.3 h at the full 2 A load (10 W). At full load, the converter draws 10 W/(0.85 × 12 V) ≈ 0.98 A from the battery, so a 3 A fuse protects the output path with margin.

F. Energy Budget

Fig. 2 traces one day of energy through the system. Derating and battery charging cause the largest losses, which is why the panel is oversized to 20 W.

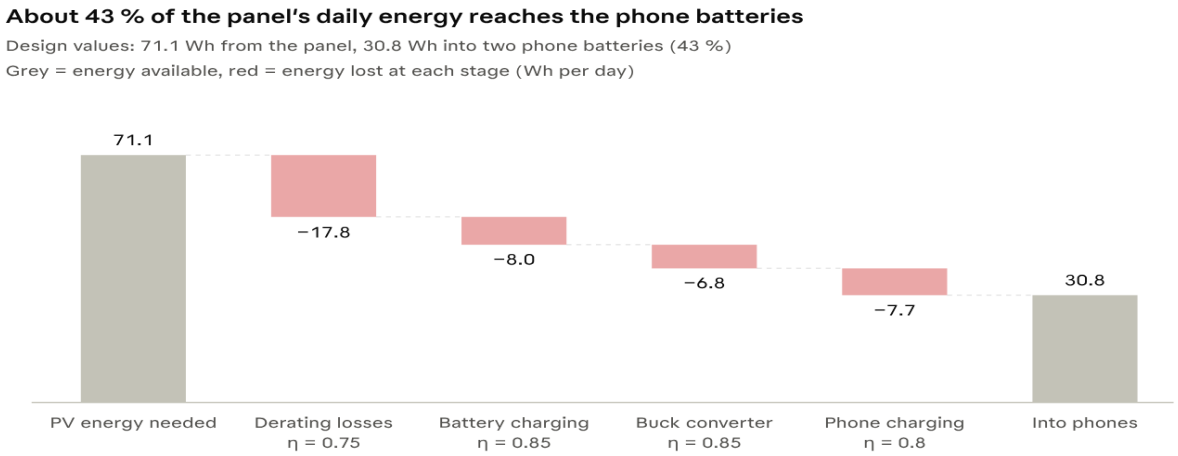

Fig. 2. Daily energy budget computed from the design values in Section IV.

V. CIRCUIT DESIGN AND SIMULATION

Simulation shows that the regulation stage needs a 12 V input to hold 5 V, and that a linear regulator wastes more than half the battery energy. This is why the design uses a 12 V battery and a switching buck converter.

Fig. 3 shows the complete wiring. The panel and battery connect to the controller's PV and BAT terminals, and its LOAD terminals feed the buck converter through a fuse and a switch.

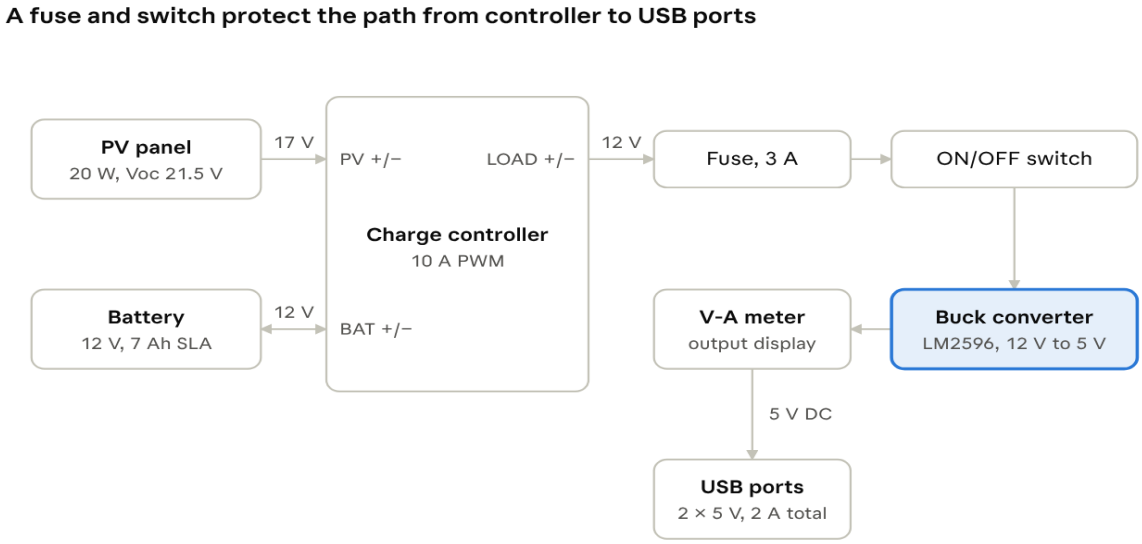

Fig. 3. Wiring diagram of the solar charging station.

The regulation stage was modelled in NI Multisim (Fig. 4). A DC source V1 represents the supply. C1 (2200 µF) is the input bulk capacitor that smooths source ripple, U1 (LM7805CT) is the regulator, and C2 (100 µF) is the output capacitor that improves transient response. A multimeter (XMM1) measures the output.

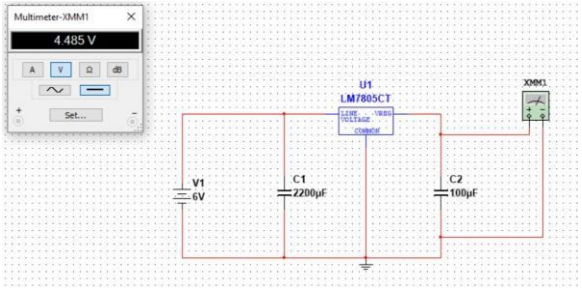

Fig. 4. Multisim simulation of the LM7805 regulation stage with a 6 V input: the output is only 4.485 V.

With a 6 V input, the output was only 4.485 V. The LM7805 needs about 2 V of headroom above its output [9], so a 6 V source cannot hold 5 V, and the result is below the 4.75 V minimum for a USB port [10]. The LM7805 datasheet requires an input of at least 7 V to regulate 5 V [9]. A 12 V battery keeps the input above this limit throughout its operating window, down to the 11.1 V low-voltage disconnect.

The simulation also shows the cost of linear regulation. A linear regulator passes the full load current, so its efficiency is roughly $V_{out}/V_{in} = 5/12 \approx 42\%$, and the remaining 58% becomes heat. A switching buck converter such as the LM2596 typically reaches 80–90% at this operating point [8]. The design therefore uses an LM2596 buck module.

VI. WORKING OF THE SYSTEM

The charge controller makes two decisions that protect the battery: it stops charging when the battery is full and cuts the load when the battery is low (Fig. 5).

1) Solar capture: In daylight, the PV panel generates DC power at about 17–18 V under load.
2) Charge regulation: The controller charges the battery while its voltage is below the full-charge

level of about 14.4 V. At that level it reduces charging to a float level to prevent overcharging.

3) Storage: The battery stores energy for night use and cloudy periods.
4) Load protection: If battery voltage falls below the low-voltage disconnect level of about 11.1 V, the controller switches the load off to prevent deep discharge. It reconnects the load once the battery recovers to about 12.6 V.
5) Voltage conversion: The buck converter steps the battery voltage down to a regulated 5 V.
6) Charging the device: The phone draws current through the USB port, and the meter displays output voltage and current.

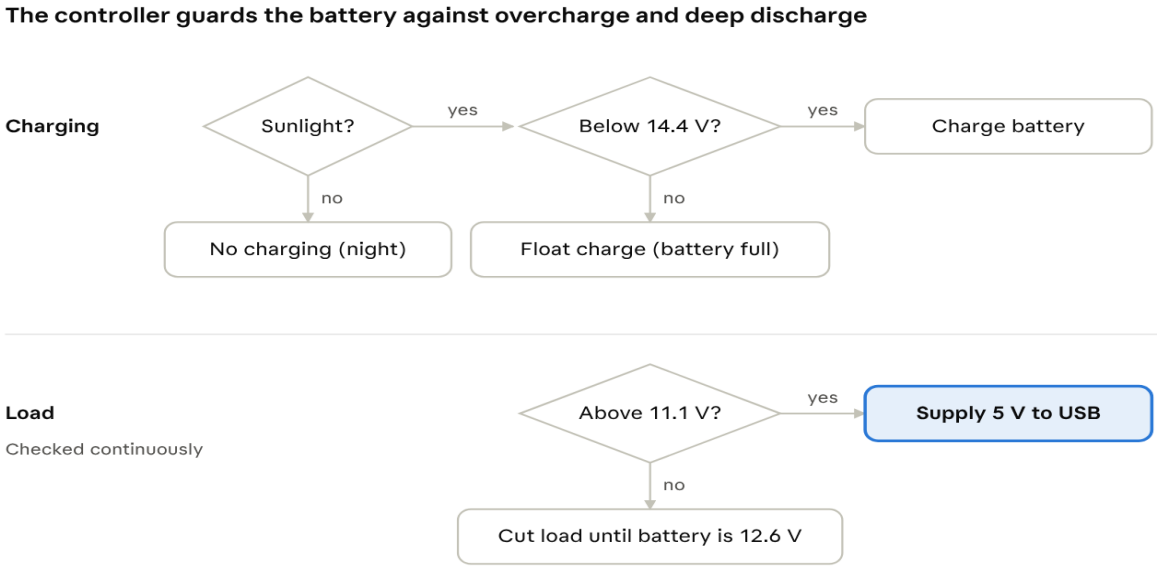

Fig. 5. Flowchart of the charge-control logic. Thresholds are typical values for a 12 V lead-acid PWM controller.

VII. PROOF-OF-CONCEPT PROTOTYPE

Before building the full battery-backed station, the 5 V regulation path was tested on a breadboard (Fig. 6). A mini polycrystalline solar panel fed an LM7805CT regulator with input and output filter capacitors, and a smartphone was connected to the regulator output through a USB cable. This prototype omits the battery, charge controller and buck converter of Fig. 1, so it tests only direct solar-to-phone regulation.

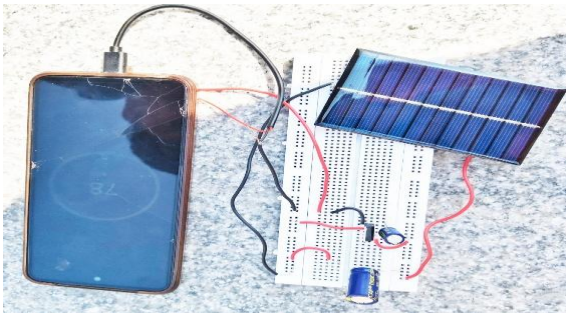

Fig. 6. Breadboard proof-of-concept prototype: mini solar panel, LM7805CT regulator and filter capacitors charging a smartphone in direct sunlight.

The test produced three observations:

1) Energy path confirmed: The smartphone charged from the regulator output in direct sunlight.
2) Output depends on irradiance: The regulator input followed the solar irradiance, so the output varied as light changed. This matches the dropout behaviour in simulation (Fig. 4): a small panel gives the LM7805 little headroom above its 7 V minimum input [9].
3) Practical losses: Jumper-wire and breadboard contact resistance added small extra voltage drops, while the input capacitor smoothed low-frequency ripple from the panel. The Multisim model, by contrast, assumes an ideal ripple-free source and lossless wiring.

These observations motivate the full design. A 12 V battery keeps the converter input stable regardless of sunlight, and a buck converter replaces the LM7805 to cut losses. The breadboard test was qualitative; detailed measurements are planned for the battery-backed prototype (Section XI).

VIII. RESULTS AND DISCUSSION

The design meets its daily load with margin. The 7 Ah battery gives about 8.6 h of backup at 1 A, and the 20 W panel refills it in about 4.3 peak-sun hours. The values in this section are calculated from Sections IV and V and the cited datasheets; they have not yet been validated on the full hardware.

A. Design Performance

Table II summarises the sizing results.

TABLE II DESIGN PERFORMANCE SUMMARY

Parameter	Required by load	Selected or calculated
Daily energy at USB port	38.5 Wh	—
Daily energy drawn from battery	45.3 Wh	—
Battery capacity (12 V)	6.3 Ah	7 Ah
PV panel rating	14.2 W	20 W
Battery recharge time	—	4.3 h of peak sun
Backup time at 1 A (5 W)	—	8.6 h
Backup time at 2 A (10 W)	—	4.3 h
Battery current at 2 A output	—	0.98 A

B. Linear Versus Switching Regulation

Table III repeats the sizing of Section IV for an LM7805 linear regulator ($\eta \approx 5/12 \approx 0.42$) and the LM2596 buck converter ($\eta \approx 0.85$ [8]). The heat loss at 2 A output is $(12 - 5)\ \text{V} \times 2\ \text{A} = 14$ W for the linear regulator, and $10\ \text{W} \times (1/0.85 - 1) \approx 1.8$ W for the buck converter.

TABLE III LINEAR VERSUS SWITCHING REGULATION FOR THE SAME DAILY LOAD

Parameter	LM7805 (linear)	LM2596 (buck)
Efficiency, 12 V to 5 V	42%	85%
Daily energy drawn from battery	92.4 Wh	45.3 Wh
Battery capacity required	12.8 Ah	6.3 Ah
PV panel required	29.0 W	14.2 W
Heat loss at 2 A output	14.0 W	1.8 W

The buck converter halves the battery and panel needed for the same load. It also cuts full-load heat by a factor of about eight, so it needs no heat sink and fits in a small sealed enclosure.

C. Output Regulation

The Multisim result in Fig. 4 and the breadboard prototype both show that regulation fails when the input falls too low. In the proposed design, the battery operates between the 11.1 V disconnect and the 14.4 V full-charge level. This window lies well inside the LM2596's 4.5–40 V input range, so the converter holds 5 V throughout [8], within the USB limits of 4.75–5.25 V [10].

D. Estimated Phone Charging Time

A 4000 mAh, 3.85 V phone battery needs 15.4 Wh, or about 19.3 Wh at the USB port with 80% phone-side efficiency. At 1 A (5 W), a full charge takes about $19.3/5 \approx 3.9$ h. At 2 A (10 W), it takes at least 1.9 h; the real time is longer because phones reduce their charging current as the battery fills.

E. Limitations

Real performance depends on irradiance, panel temperature, tilt, dust and battery age. Building the full battery-backed prototype and measuring it under field conditions is the next step (Section XI).

IX. COST ANALYSIS

The station's components cost about ₹2,860 (Table IV), and every part is available from Indian online retailers.

TABLE IV COMPONENT COST BREAKDOWN

Component	Specification	Qty	Price (₹)
PV panel	20 W, 12 V polycrystalline	1	1,195
Battery	12 V, 7 Ah SMF lead-acid	1	832
Charge controller	12 V, 10 A PWM	1	386

Voltmeter-ammeter	0–100 V, 10 A dual display	1	104
Buck converter	LM2596 module	1	40
Miscellaneous	USB ports, fuse, switch, LED, wiring, enclosure	1 set	300 (est.)
Total			2,857

Prices are online retail listings in India accessed in November 2026 [11]. The miscellaneous row is an estimate, and prices vary by seller and brand.

X. CONCLUSION

This paper presented the design, simulation and proof-of-concept prototype of a low-cost, battery-backed solar mobile charging station. Sizing from a daily load of two smartphone charges gave a 20 W panel and a 12 V, 7 Ah battery with one day of autonomy. Multisim simulation showed that a linear LM7805 stage fed from 6 V outputs only 4.485 V, below the USB minimum. A breadboard prototype charged a smartphone directly from a mini solar panel, but its output varied with sunlight, which confirms the need for a battery. Design analysis showed that an LM2596 buck converter halves the battery and panel size compared with a linear regulator and cuts full-load heat from 14 W to under 2 W. The proposed station offers an estimated 8.6 h of backup at 1 A, recharges in about 4.3 peak-sun hours and costs about ₹2,860 in components. It suits rural areas, campuses and emergency use, where grid power is unreliable.

XI. FUTURE SCOPE

1) Battery-backed prototype and field testing: build the station and measure output regulation, converter efficiency and phone charging time under real sunlight, to validate the calculated results.
2) IoT monitoring: an ESP32 to log panel power, battery state of charge and load current to a dashboard, with low-battery and fault alerts.
3) MPPT charge controller: to replace PWM and harvest more energy, especially in winter and partial shade.
4) Fast and wireless charging: USB-C Power Delivery or Quick Charge ports and a Qi wireless pad, with battery sizing for the higher current.
5) Lithium battery: $LiFePO_4$ cells with a battery management system (BMS) for higher usable capacity, lower weight and longer cycle life.

REFERENCES

[1] Ministry of New and Renewable Energy, Government of India, “Solar overview.” [Online]. Available: https://mnre.gov.in/solar-overview/ (accessed Nov. 2026).
[2] A. J. Alrubaie, M. Salem, K. Yahya, M. Mohamed, and M. Kamarol, “A comprehensive review of electric vehicle charging stations with solar photovoltaic system considering market, technical requirements, network implications, and future challenges,” Sustainability, vol. 15, no. 10, p. 8122, 2023, doi: 10.3390/su15108122.
[3] B. Tran, J. Ovalle, K. Molina, R. Molina, and H. T. Le, “Solar-powered convenient charging station for mobile devices with wireless charging capability,” WSEAS Trans. Syst., vol. 20, pp. 260–271, 2021, doi: 10.37394/23202.2021.20.29.
[4] A. Singh, S. S. Shaha, P. G. Nikhil, Y. R. Sekhar, S. Saboor, and A. Ghosh, “Design and analysis of a solar-powered electric vehicle charging station for Indian cities,” World Electr. Veh. J., vol. 12, no. 3, p. 132, 2021, doi: 10.3390/wevj12030132.
[5] P. Singla, S. Boora, P. Singhal, N. Mittal, V. Mittal, and F. Gared, “Design and simulation of 4 kW solar power-based hybrid EV charging station,” Sci. Rep., vol. 14, p. 7336, 2024, doi: 10.1038/s41598-024-56833-5.
[6] G. Badea et al., “Design and simulation of Romanian solar energy charging station for electric vehicles,” Energies, vol. 12, no. 1, p. 74, 2019, doi: 10.3390/en12010074.
[7] S. Labade, R. Mane, A. Modak, A. Sadgire, and T. Harde, “Phone charger using sun tracking solar panel,” Int. J. Res. Appl. Sci. Eng. Technol., vol. 11, no. 4, Apr. 2023, doi: 10.22214/ijraset.2023.50632.
[8] Texas Instruments, “LM2596 SIMPLE SWITCHER power converter 150-kHz 3-A step-

down voltage regulator," datasheet. [Online]. Available: https://www.ti.com/lit/ds/symlink/lm2596.pdf

[9] Texas Instruments, "LM340, LM340A and LM7805 family wide VIN 1.5-A fixed voltage regulators," datasheet. [Online]. Available: https://www.ti.com/lit/ds/symlink/lm340.pdf

[10] USB Implementers Forum, Universal Serial Bus Specification, Revision 2.0, Apr. 2000.

[11] Online retail listings, accessed Nov. 2026: Moglix (20 W panel), Government e-Marketplace (12 V 7 Ah battery), Flipkart (10 A PWM controller), Robocraze (voltmeter-ammeter, LM2596 module). [Online]. Available: https://www.moglix.com, https://gem.gov.in, https://www.flipkart.com, https://robocraze.com

[12] A. K. Patil, M. Hans, V. Shete and R. Shinde, "An Adjustable Window for FIR Filter Design with Improved Spectral Characteristics and Application," 2026 9th International Conference on Trends in Electronics and Informatics (ICOEI), Tirunelveli, India, 2026, pp. 218-223, doi: 10.1109/ICOEI68323.2026.11542205.

[13] Shinde, R., Gadhave, S., Swami, S., Kulkarni, R., & Patil, A. K. (2024). Real-time mobile phone detection system. International Journal of Creative Research Thoughts, 12(11), 1105–1110.

[14] R. P. Shinde, M. R. Hans, V. V. Shete and A. Patil, "Enhanced Transformerless Full-Bridge PV Inverter with Optimized Switch Placement for Common-Mode Leakage Current Reduction," 2026 IEEE International Conference on Interdisciplinary Approaches in Technology and Management for Social Innovation (IATMSI), Gwalior, India, 2026, pp. 1-6. doi: 10.1109/IATMSI68868.2026.11465296.

[15] Prof. Rohan Shinde, Sakshi Mule, Pradnya Galbale, Pranjali Jadhav, Revan Pathare (2025), Solar UPS Project, International Research Journal of Engineering and Technology (IRJET), 12 (11), 856-859.

[16] Prof. Rohan Shinde Harshala Kulkarni, Isha Jadhav, Riya Mahale (2025), AI interview coach, International Research Journal of Engineering and Technology (IRJET), 12 (11), 834-837

[17] Prof. Rohan Shinde Tanishka Dhumal, Swastik Mahamuni, Yash Pawar, Sujal Sarkale (2025), UV Ray Detection Using Comparator, International Research Journal of Engineering and Technology (IRJET), 12 (11), 821-827.

[18] Prof. Rohan Shinde, Hardik Sakhuja, Ananya Kadam, Anuja Kadam, Adarsh Singh (2025), Pocket Power Inverter, International Research Journal of Engineering and Technology (IRJET), 12 (11), 817-820.

[19] Aditya Khatgaonkar Prof. Rohan Shinde, Piyush Tapase, Atharv Nikam, Aayush Kulhade, (2025), Smart Autonomous Robot with Voice Interaction and Local AI Processing on Raspberry Pi 5, International Research Journal of Engineering and Technology (IRJET), 12 (11), 814-816.

[20] Rohan Shinde, Yash Choudhary, Yash Kokade, Ritika Shanbhag, Pranav Ragunath, (2024), Vehicle Accident Prevention System, International Journal of Creative Research Thoughts – IJCRT, 12 (11), h659-h663.

[21] Jayant Santosh Nerkar, Kamish Jamal, Aditya Shekhar Tiwari, Rohan Shinde, (2023) IOT Based Monitor and Control Irrigation System, International Journal of Scientific Research in Engineering and Management (IJSREM) 7 (5), 1-5.

[22] S Bhadane Pratik, A Rathod Sneha, Perampalli Atiya Md, H Shinde Pooja, P Shinde Rohan (2027), Vertical Axis Highway Windmill Using Magnetic Levitation, International Journal of Latest Engineering Research and Applications (IJLERA), 2 (5), 1-5.

[23] R. P. Shinde, M. R. Hans, V. V. Shete and A. Patil, "Enhanced Transformerless Full-Bridge PV Inverter with Optimized Switch Placement for Common-Mode Leakage Current Reduction," 2026 IEEE International Conference on Interdisciplinary Approaches in Technology and Management for Social Innovation (IATMSI), Gwalior, India, 2026, pp. 1-6. doi: 10.1109/IATMSI68868.2026.11465296.

[24] R. P. Shinde, M. R. Hans, V. V. Shete and A. Patil, "Enhanced Transformerless Full-Bridge PV Inverter with Optimized Switch Placement for Common-Mode Leakage Current Reduction," 2026 IEEE International Conference on Interdisciplinary Approaches in Technology and Management for Social Innovation (IATMSI), Gwalior, India, 2026, pp. 1-6. doi: 10.1109/IATMSI68868.2026.11465296.